US Department of Transportation
Federal Aviation Administration

MAJOR REPAIR AND ALTERATION
(Airframe, Powerplant, Propeller, or Appliance)

OMB No. 2120-0020
Exp: 5/31/2018

Electronic Tracking Number

For FAA Use Only

INSTRUCTIONS: Print or type all entries. See Title 14 CFR §43.9, Part 43 Appendix B, and AC 43.9-1 (or subsequent revision thereof) for instructions and disposition of this form. This report is required by law (49 U.S.C. §44701). Failure to report can result in a civil penalty for each such violation. (49 U.S.C. §46301(a))

1. Aircraft	Nationality and Registration Mark: N5813F	Serial No.: 24-1563	
	Make: MOONEY	Model: M20J	Series:
2. Owner	Name *(As shown on registration certificate)*: EAGLE CAP AIR LLC	Address *(As shown on registration certificate)*: Address 3439 NE SANDY BLVD # 473; City PORTLAND; State OR; Zip 97232; Country USA	

3. For FAA Use Only

4. Type		5. Unit Identification			
Repair	Alteration	Unit	Make	Model	Serial No.
☐	☒	AIRFRAME	MOONEY	*(As described in Item 1 above)*	24-1563
☐	☐	POWERPLANT			
☐	☐	PROPELLER			
☐	☐	APPLIANCE	Type / Manufacturer		

6. Conformity Statement

A. Agency's Name and Address
Name: Air Sense Avionics, Inc.
Address: 53770 Airport Road
City: Scappoose State: OR
Zip: 97056 Country: USA

B. Kind of Agency

	U. S. Certificated Mechanic	Manufacturer
	Foreign Certificated Mechanic	C. Certificate No.
X	Certificated Repair Station	53NR597D
	Certificated Maintenance Organization	

D. I certify that the repair and/or alteration made to the unit(s) identified in item 5 above and described on the reverse or attachments hereto have been made in accordance with the requirements of Part 43 of the U.S. Federal Aviation Regulations and that the information furnished herein is true and correct to the best of my knowledge.

Extended range fuel per 14 CFR Part 43 App. B ☐

Signature/Date of Authorized Individual: 02/28/2025

7. Approval for Return to Service

Pursuant to the authority given persons specified below, the unit identified in item 5 was inspected in the manner prescribed by the Administrator of the Federal Aviation Administration and is ☒ Approved ☐ Rejected

BY								
		FAA Flt. Standards Inspector		Manufacturer		Maintenance Organization		Persons Approved by Canadian Department of Transport
		FAA Designee	X	Repair Station		Inspection Authorization		Other *(Specify)*

Certificate or Designation No. 53NR597D

Signature/Date of Authorized Individual: 02/28/2025

FAA Form 337 (10/06)

NOTICE

Weight and balance or operating limitation changes shall be entered in the appropriate aircraft record. An alteration must be compatible with all previous alterations to assure continued conformity with the applicable airworthiness requirements.

8. Description of Work Accomplished
(If more space is required, attach additional sheets. Identify with aircraft nationality and registration mark and date work completed.)

N5813F	02/28/2025
Nationality and Registration Mark	Date

Removed existing OEM fuel senders PN 610242-001 at both inboard positions, 610243-001 at right outboard position, and 610243-003 at left outboard position. Installed new CiES digital fuel senders; PN CC284022-(0706)-(101) SN MY2073 in the inboard, and PN CC284022-(0707)-(101) SN MY2075 in the outboard positions of the left tank; and PN CC284022-(0706)-(102) SN MY2074 in the inboard, and PN CC284022-(0707)-(102) SN MY2076 in the outboard positions of the right tank. Ran new fuel quantity cables from senders and terminated them at GEA 24B. All work performed with reference to CiES installation instructions CC-TR-2840-031 Rev F and STC SA02511SE.

Removed existing JPI OAT PN 400510 SN 00418. Removed existing OEM engine instrument gauge cluster PN 640281-519 SN 168, oil pressure transducer amplifier PN 950D0311-002 SN 029, fuel pressure amplifier PN 950 D 0311-001 SN 371, manifold pressure gauge PN 6414 SN 106, SDI Hoskins FT-101 fuel flow indicator PN 702165-1 SN 1560, JPI Temperature Indicator PN 302661 Rev. 1.0 SN 1154, B&D Inst. Tachometer PN 0513-016 Rev. E SN 57255, and ammeter PN 5-90012. Removed existing EGT probes PN M-111 and spark plug gasket-style CHT probes PN MM-113 from each of 4 cylinders. Removed existing Tanis engine heater and harness.

Installed new Garmin GEA 24B Engine Adapter PN 011-05991-01 SN 7NM004665 on inboard side of circuit breaker module. Installed new Alcor EGT probes PN 494-70001-00 and CHT probes PN 494-70008-00 on each of 4 cylinders. Installed new UMA oil temperature transducer PN 494-70009-00 SN B4402. Installed new Garmin fuel pressure transducer PN 011-04202-20 SN 74D203303, oil pressure transducer PN 011-04202-30 SN 74D306728, and manifold pressure transducer PN 011-04202-00 SN 74D004838 and connected to existing hoses. Fabricated and installed ignition pickup RPM sensor.

Fabricated wiring harness and installed new Garmin GI 275 instrument PN 010-02325-00 SN 5MZ007361 as an engine instrumentation system (EIS) display. Interfaced to existing GI 275 indicators via HSDB and to GEA 24B via serial. Updated software on all Garmin GI 275 indicators to software rev 3.20 per Garmin STC Service Bulletin 24044B. Configured EIS. Verified all sensors function correctly. Incrementally filled fuel tanks and calibrated Garmin GI 275 EIS fuel quantities. Ran-up engine. No leaks found and ops check OK. All work performed with reference to Garmin GI 275 Part 23 AML Installation Manual 190-02246-10 Rev 19, and STC SA02658SE.

---------- END ----------

☐ Additional Sheets Are Attached

US Department of Transportation
Federal Aviation Administration

MAJOR REPAIR AND ALTERATION
(Airframe, Powerplant, Propeller, or Appliance)

OMB No. 2120-0020
Exp: 5/31/2018

Electronic Tracking Number

For FAA Use Only

INSTRUCTIONS: Print or type all entries. See Title 14 CFR §43.9, Part 43 Appendix B, and AC 43.9-1 (or subsequent revision thereof) for instructions and disposition of this form. This report is required by law (49 U.S.C. §44701). Failure to report can result in a civil penalty for each such violation. (49 U.S.C. §46301(a))

1. Aircraft	Nationality and Registration Mark: N5813F	Serial No.: 24-1563	
	Make: MOONEY	Model: M20J	Series:
2. Owner	Name *(As shown on registration certificate)*: EAGLE CAP AIR LLC	Address *(As shown on registration certificate)*: Address 3439 NE SANDY BLVD #473; City PORTLAND; State OR; Zip 97232; Country USA	

3. For FAA Use Only

4. Type		5. Unit Identification			
Repair	Alteration	Unit	Make	Model	Serial No.
☐	☒	AIRFRAME	MOONEY	*(As described in Item 1 above)*	24-1563
☐	☐	POWERPLANT			
☐	☐	PROPELLER			
☐	☐	APPLIANCE	Type / Manufacturer		

6. Conformity Statement

A. Agency's Name and Address	B. Kind of Agency	
Name: Air Sense Avionics, Inc.	☐ U. S. Certificated Mechanic	☐ Manufacturer
Address: 53770 Airport Road	☐ Foreign Certificated Mechanic	C. Certificate No.
City: Scappoose State: OR	☒ Certificated Repair Station	53NR597D
Zip: 97056 Country: USA	☐ Certificated Maintenance Organization	

D. I certify that the repair and/or alteration made to the unit(s) identified in item 5 above and described on the reverse or attachments hereto have been made in accordance with the requirements of Part 43 of the U.S. Federal Aviation Regulations and that the information furnished herein is true and correct to the best of my knowledge.

Extended range fuel per 14 CFR Part 43 App. B ☐	Signature/Date of Authorized Individual: 8/10/2024

7. Approval for Return to Service

Pursuant to the authority given persons specified below, the unit identified in item 5 was inspected in the manner prescribed by the Administrator of the Federal Aviation Administration and is ☒ Approved ☐ Rejected

BY								
		FAA Flt. Standards Inspector		Manufacturer		Maintenance Organization		Persons Approved by Canadian Department of Transport
		FAA Designee	X	Repair Station		Inspection Authorization		Other *(Specify)*

Certificate or Designation No. 53NR597D	Signature/Date of Authorized Individual: 8/10/2024

FAA Form 337 (10/06)

NOTICE

Weight and balance or operating limitation changes shall be entered in the appropriate aircraft record. An alteration must be compatible with all previous alterations to assure continued conformity with the applicable airworthiness requirements.

8. Description of Work Accomplished
(If more space is required, attach additional sheets. Identify with aircraft nationality and registration mark and date work completed.)

N5813F	8/10/2024
Nationality and Registration Mark	Date

Removed existing King KI-256 vacuum ADI PN 060-0017-00 SN 13320 and KI-525A DG PN 066-3046-00 SN 24606, EMA suction gauge PN 3-310-55 SN A1344, Tempest vacuum pump PN AA3215CC SN N43601, Parker vacuum regulator PN 482001-0101 no SN, Rapco air filter PN RA-D9-18-1, and associated plumbing. Removed King KA-51B slaving switch PN 8071-1242-05 SN 4238, and KMT-112 magnetometer PN 071-1052-00 SN 25923. Removed KI-206 ILS indicator PN 066-3034-04 SN 15911. Stripped old wiring from aircraft. Opened fuselage inspection panels. Removed Aero-Safe electric standby vacuum system SN 000664, and KG-102A gyro PN 060-0015-00 SN 40842, Installed Garmin GMU 11 magnetometer PN 010-01788-01 SN 56J112355 in L wing. Installed new Garmin GTP 59 OAT probe PN 011-00978-00 SN 47978148 (for GI 275) in R wing. Removed OEM OAT probe no PN or SN. Installed two GI 275 indicators PN 010-01912-20 SN 5MZ203016 as ADI and SN 5MZ113557 as HSI. Interfaced to existing navigators, audio panel and KFC autopilot. Plumbed to pitot/static system. Installed GSB 15 Dual Type-A USB interface/charger PN 010-02201-10 SN 63M065944. Installed new circuit breakers for GI 275 ADI and HSI on circuit breaker module essential and avionics busses. Configured and tested all new equipment. Updated GI 275 SW (both units) to rev 3.20. Calibrated magnetometer. GI 275 system installation performed with reference to GI 275 Part 23 AML Installation Manual 190-02246-10 Rev 19 and STC SA02658SE.

Provided owner with GI 275 Pilots Guide 190-02246-01 Rev P. Added Garmin GI 275 AFMS 190-02246-12 Rev 12 to the POH. Added the GI 275 Maintenance Manual 190-02246-11 Rev 9 to the aircraft permanent records. Provided owner with all STCs and permission letters. Updated aircraft weight & balance and equipment list.

---------- END ----------

☐ Additional Sheets Are Attached

US Department of Transportation
Federal Aviation Administration

MAJOR REPAIR AND ALTERATION
(Airframe, Powerplant, Propeller, or Appliance)

Form Approved
OMB No. 2120-0020
11/30/2007

Electronic Tracking Number

For FAA Use Only

INSTRUCTIONS: Print or type all entries. See Title 14 CFR 43.9, Part 43 Appendix B, and AC 43.9-1 (or subsequent revision thereof) for instructions and disposition of this form. This report is required by law (49 U.S.C. §44701). Failure to report can result in a civil penalty for each such violation. (49 U.S.C. §46301(a))

1. Aircraft	Nationality and Registration Mark **N5813F**	Serial No. **24-1563**	
	Make **MOONEY**	Model **M20J**	Series
2. Owner	Name *(As shown on registration certificate)* **EAGLE CAP AIR LLC**	Address *(As shown on registration certificate)* **3439 NE SANDY BLVD # 473** **PORTLAND, OREGON** **97232-1959**	

3. For FAA Use Only

4. Type		5. Unit Identification			
Repair	Alteration	Unit	Make	Model	Serial No.
	XXX	AIRFRAME	----------	*(As described in item 1 above)*	----------
		POWERPLANT			
		PROPELLER			
		APPLIANCE	Type Manufacturer		

6. Conformity Statement

A. Agency's Name and Address	B. Kind of Agency			C. Certificate No.
Pacific Coast Avionics Corporation **22783 Airport Road NE** **Aurora Oregon, 97002**			U.S. Certificated Mechanic	
			Foreign Certificated Mechanic	
		XXX	Certificated Repair Station	**OPXR455L**
			Certificated Maintenance Organization	
			Manufacturer	

D. I certify that the repair and/or alteration made to the unit(s) identified in item 5 above and described on the reverse or attachments hereto have been made in accordance with the requirements of Part 43 of the U.S. Federal Aviation Regulations and that the information furnished herein is true and correct to the best of my knowledge.

Extended range fuel Per 14 CFR Part 43 App. B ☐

Signature/Date of Authorized Individual

Frank Palmer Frank Palmer **June 28, 2024**

7. Approval for Return To Service

Pursuant to the authority given persons specified below, the unit identified in item 5 was inspected in the manner prescribed by the Administrator of the Federal Aviation Administration and is ✓ APPROVED ☐ REJECTED

BY								
		FAA Flt. Standards Inspector		Manufacturer		Maintenance Organization		Person Approved by Transport Canada Airworthiness Group
		FAA Designee	X	Repair Station		Inspection Authorization		Other *(Specify)*

Certificate or Designation No.
OPXR455L

Signature/Date of Authorized Individual

Frank Palmer Frank Palmer **June 28, 2024**

NOTICE

Weight and balance or operating limitation changes shall be entered in the appropriate aircraft record. An alteration must be compatible with all previous alterations to assure continued conformity with the applicable airworthiness requirements.

8. Description of Work Accomplished

(If more space is required, attach additional sheets. Identify aircraft nationality and registration mark and date work completed.)

N5813F	June 28, 2024
Nationality and Registration Mark	Date

Description of Type Design Change:

Installation of Garmin GTN 750Xi GPS/NAV/COM in accordance with FAA approved Garmin STC SA02019SE-D and Master Documents List 005-00533-C0 Rev 44, dated June 2024, or later FAA approved revision.

Installation of Garmin GTX 345 Transponder in accordance with FAA approved Garmin STC SA01714WI and Master Documents List 005-00734-04 Rev 23, dated May 2024, or later FAA approved revision.

The FAA approved Garmin GTN 750Xi Airplane Flight Manual Supplement 190-01007-C2 Rev 8, dated April 2024; and the FAA approved Garmin GTX 345 Airplane Flight Manual Supplement 190-00734-15 Rev 6, dated May 2024 are required for in flight operation of the systems when installed and have been placed in the Aircraft.

Alteration Notes:

Removed Garmin GMA 347 Audio Panel s/n 47000868, Garmin GTX 330 Transponder s/n 84122174, Garmin GNS 430 GPS/NAV/COM s/n 97134466, Garmin GNS 530W GPS/NAV/COM s/n 78416170, and all associated installation kits, trays and wiring to facilitate other maintenance.

The Garmin GTN 750Xi GPS/NAV/COM has been installed in the radio stack at F.S. 17.24. It receives power from the Avionics buss using an existing 10 amp circuit breaker labeled "COM 1" and a newly installed 7.5 amp Klixon 7274-2-X series circuit breaker labeled "NAV 1". The GTN 750Xi was installed, inspected, configured and tested IAW the FAA approved Garmin GTN 750Xi document 190-01007-C0 Rev 11, dated May 2024 approved under STC SA02019SE-D.

The Garmin GTX 345 Transponder has been installed in the radio stack at F.S. 17.1. It receives power from the Avionics buss using an existing 3 amp circuit breaker labeled "XPDR". The GTX 345 was installed, inspected, configured and tested IAW the FAA approved Garmin GTX 345 document 190-00734-10 Rev 17, dated May 2024 approved under STC SA01714WI.

The aircraft weight and balance, equipment list, and flight manual have been amended to reflect changes made to the aircraft. An electrical load analysis required by 14 CFR 23.1351(a)(2) was performed in accordance with AC 43.13-2B, Chapter 2, paragraph 208(b) and ASTM F2490-05 and the continuous load of the charging system was found not to exceed 80% of its capacity.

Instructions for Continued Airworthiness:

The FAA approved Garmin GTN 750Xi Instructions for Continued Airworthiness 190-01007-C1 Rev 5, dated May 2024; and the FAA approved Garmin GTX 345 Instructions for Continued Airworthiness 190-00734-11 Rev 8, dated June 2021 have been included with the aircraft maintenance records.

----------End----------

☐ Additional Sheets Are Attached

U.S Department of Transportation
Federal Aviation Administration

MAJOR REPAIR AND ALTERATION
(Airframe, Powerplant, Propeller, or Appliance)

Form Approved
OMB No. 2120-0020
11/30/2007

Electronic Tracking Number

For FAA Use Only

INSTRUCTIONS: Print or type all entries. See FAR 43.9, FAR 43 Appendix B, and AC 43.9-1 (or subsequent revision thereof) for instructions and disposition of this form. This report is required by law (49 U.S.C. 1421). Failure to report can result in a civil penalty not to exceed $1,000 for each such violation (Section 901 Federal Aviation Act 1958)

1. Aircraft	Nationality and Registration Mark N5813F	Serial No 24-1563	
	Make Mooney	Model M20	Series J
2. Owner	Name *(As shown on registration certificate)* KOENIGSKNECHT STEVEN J	Address *(As shown on registration certificate)* Address 935 Robinson Lake Rd City Trout Creek State Michigan Zip 49967-9516 Country USA	

3. For FAA Use Only

4. Type		5. Unit Identification			
Repair	Alteration	Unit	Make	Model	Serial Number
☐	☒	AIRFRAME	—	*(As described in Item 1 above)*	—
☐	☐	POWERPLANT			
☐	☐	PROPELLER			
☐	☐	APPLIANCE	Type Manufacturer		

6. Conformity Statement

A. Agency's Name and Address	B. Kind of Agency		
Name Kubick Aviation Services, Inc.	☐	U.S. Certificated Mechanic	☐ Manufacturer
Address 250 Riverhills Rd	☐	Foreign Certificated Mechanic	C. Certificate No.
City Kingsford State MI	☒	Certificated Repair Station	2KAR596C
Zip 49802 Country United States	☐	Certificated Maintenance Organization	

D. I certify that the repair and/or alteration made to the unit(s) identified in item 5 above and described on the reverse or attachments hereto have been made in accordance with the requirements of Part 43 of the U.S. Federal Aviation Regulations and that the information furnished herein is true and correct to the best of my knowledge.

Extended range fuel per 14 CFR Part 43 App. B ☐	Signature/Date of Authorized Individual Chad Kubick	11/29/2017

7. Approval for Return to Service

Pursuant to the authority given persons specified below, the unit identified in item 5 was inspected in the manner prescribed by the Administrator of the Federal Aviation Administration and is ☒ APPROVED ☐ REJECTED

BY								
		FAA Flt Standards Inspector		Manufacturer		Maintenance Organization		Person Approved by Canadian Department of Transport
		FAA Designee	X	Repair Station		Inspection Authorization		Other *(Specify)*

Certificate or Designation No. 2KAR596C	Signature/Date of Authorized Individual Chad Kubick	11/29/2017

NOTICE

Weight and balance or operating limitation changes shall be entered in the appropriate aircraft record. An alteration must be compatible with all previous alterations to assure continued conformity with the applicable airworthiness requirements.

8. Description of Work Accomplished

(If more space is required, attach additional sheets. Identify with aircraft nationality and registration mark and date work completed.)

N5813F	11/29/2017
Nationality and Registration Mark	Date

Removed the following equipment:

- Garmin GTX330 Transponder P/N 011-00455-00
- King KR 87 ADF system including ADF receiver P/N 066-1072-00, indicator P/N KI 227, antenna P/N 071-1234-00.

Installed the following equipment:

- **Garmin GTX330ES** ADS-B out Transponder P/N 011-00455-60 in accordance with STC SA01714WI and Installation Manual P/N 190-00734-10 rev 8. GTX330ES interfaced to existing Garmin GNS530W Navigator.
- Provided Instructions for Continued Airworthiness in accordance with manufacturer's instructions from system maintenance manual P/N 190-00734-11 rev 3 Mar 2016 Chapter 4 and GTX330ES AFMS P/N 190-00734-15 rev 2, March 08, 2016.

Recomputed aircraft Weight & Balance and revised Equipment List this date.

----------END----------

☐ Additional Sheets Are Attached

United States of America

Department of Transportation -- Federal Aviation Administration

Supplemental Type Certificate

Number SA01714WI

This certificate issued to Garmin International, Inc.
1200 East 151st Street
Olathe, KS 66062

certifies that the change in the type design for the following product with the limitations and conditions therefore as specified hereon meets the airworthiness requirements of Part 23 of the* Federal Aviation *Regulations.*

Original Product Type Certificate

Number: * See attached Approved Model List (AML) No. SA01714WI dated May 1, 2013 or later FAA-approved revision for list of approved aircraft models and applicable airworthiness regulations.
Make:
Model:

Description of Type Design Change:

Installation of a Garmin transponders: (a) GTX 330/330D/33/33D with ADS-B Out functionality; (b) GTX 335/335R/345/345R with ADS-B Out and In functionality; or (c) GTX 335R/345R with ADS-B Out functionality in select airplanes installed with G950/G1000 systems.

Data Required:

(1) Garmin Master Drawing List (MDL) 005-00734-04, Revision 1, dated May 1, 2013 or later FAA-approved revision.

(2) Garmin Airplane Flight Manual Supplement or Supplemental Airplane Flight Manual (AFMS), 190-00734-15, Revision 1, dated May 1, 2013 or later FAA-approved revision.

Limitations and Conditions:

(1) Compatibility of this design change with previously approved modifications must be determined by the installer.

(2) Aircraft installations involving the Garmin transponder GTX 33/33D/330/330D models require the previous installation of an approved ADS-B position source. Refer to the design data specified in the Master Drawing List (MDL) listed above for specific hardware and software requirements.

(3) Aircraft installations involving the Garmin transponder GTX 335/335R/345/345R models without an optional internal GPS require the previous installation of an approved ADS-B position source. Refer to the design data specified in the Master Drawing List (MDL) listed above for specific hardware and software requirements.

This certificate and the supporting data which is the basis for approval shall remain in effect until surrendered, suspended, revoked or a termination date is otherwise established by the Administrator of the Federal Aviation Administration.

Date of application: August 7, 2012

Date reissued:

Date of issuance: May 1, 2013

Date amended: April 29, 2014, March 8, 2016

By direction of the Administrator

(Signature)

Michael Warren
ODA STC Unit Administrator
ODA-240087-CE
Garmin International, Inc.

(Title)

Any alteration of this certificate is punishable by a fine of not exceeding $1,000, or imprisonment not exceeding 3 years, or both.

This certificate may be transferred in accordance with FAR 21.47.

United States of America

Department of Transportation -- Federal Aviation Administration

Supplemental Type Certificate

(Continuation Sheet)

Number SA01714WI

Date of issuance: May 1, 2013

Date Amended: April 29, 2014, March 8, 2016

Limitations and Conditions (continued):

(4) Aircraft with G950 or G1000 display systems are limited to Garmin transponder GTX 335R/345R models; see Table II of the attached AML. Refer to the design data specified in the Master Drawing List (MDL) listed above for specific hardware and software requirements.

(5) Aircraft modified by this STC must be operated in accordance with the Airplane Flight Manual Supplement or Supplemental Airplane Flight Manual (AFMS) identified above.

(6) Aircraft modified by this STC must be maintained in accordance with the Instructions for Continued Airworthiness (ICA) listed in the Master Drawing List (MDL) identified above.

(7) If the holder agrees to permit another person to use this certificate to alter the product, the holder must give the other person written evidence of that permission.

***Certification Basis**

Based on 14 CFR §§ 21.115 and 21.101, and the FAA policy for significant changes in FAA Order 8110.48, the certification basis for this change is as follows:

a. The certification basis for parts **not changed** or **not affected** by this change is shown on the attached AML.

b. The certification basis for parts **changed** or **affected** by this change is:

Section	Amdt	Section	Amdt	Section	Amdt
23.301 a	23-48	23.773 a(2)	23-45	23.1357 a, b, c, d	23-43
23.303	Original	23.777 a, b	23-62	23.1359 c	23-49
23.305	23-45	23.853 a	23-62	23.1365 a, b, d, e	23-49
23.307 a	Original	23.863 a, b	23-34	23.1367 a, b, c, d	Original
23.337	23-48	23.1301 a, b, c	23-62	23.1431 a, b	23-62
23.561 b(3), e	23-62	23.1306 a, b	23-61	23.1501 a, b	23-21
23.601	Original	23.1307	23-49	23.1525	23-45
23.603	23-23	23.1308 a, b, c	23-57	23.1529	23-26
23.605 a	23-23	23.1309 a(1)(2),b, c, d	23-62	23.1555 a, b, e(2)	23-62
23.607 a, b	23-48	23.1310	23-62	23.1581 a, b, c, f	23-50
23.611	23-48	23.1311 a(2)	23-62	23.1583 h, m	23-62
23.613 a, b	23-45	23.1322 b, d, e	23-43	23.1585 j	23-62
23.627	Original	23.1351 a	23-49	-----	----
23.771 a	23-14	23.1353 h	23-62	-----	----

----------END----------

FAA Approved Model List (AML)

STC Number SA01714WI

Installation of Garmin Transponder GTX 33X and GTX 3X5 with ADS-B

FAA APPROVED

ODA ADMINISTRATOR

21-JUL-2016

DATE

ODA-240087-CE
Garmin International
1200 E. 151st Street, Olathe KS 66062

Issued Date: May 1, 2013
Revised Date: August 27, 2013,
March 8, 2016
July 21, 2016

FAA Approved Model List (AML) STC Number SA01714WI

AML Revision Log

Date	Description
5/1/2013	Initial Release
8/27/2013	Defined which aircraft were certified with 14CFR 23.1353(h) being part of the certification basis.
08-Mar-2016	Added GTX 3X5 along with additional aircraft models. Split the AML into two tables as noted below
21-July-2016	Corrected typographical error regarding LC42-550FG in Table II

NOTE:
This AML contains 2 Tables as part of the 08-Mar-2016 revision.

1. **Table I** identifies Aircraft approved for the GTX 33X and GTX 3X5 **WITHOUT** GX000 Equipped flight deck system
2. **Table II** identifies Aircraft approved for the GTX 3X5R only **WITH** G950/G1000 Equipped flight deck system

All notes are listed at the end of the document

Table of Tables

FAA Approved Model List (AML) STC SA01714WI

Table I: Approved Aircraft WITHOUT GX000 Equipped Flight Deck System for installation of GTX 33/330 or GTX 335/345 Transponders						
Airplane Make (TCDS Holder) [common name or previous make]	**Airplane Model Designation**	**Type Certificate Number**	*** TC Certification Basis**	**Master Drawing List Revision (005-00734-04)**	**AML Revision/Date**	**Notes**
Mooney (Mooney International Corporation) [Mooney Aviation Company, Inc.; Mooney Airplane Co; Mooney Aircraft Corporation; Aerostar Aircraft Corp]	M20, M20A, M20B, M20C, M20D, M20E, M20F ,M20G, M20J, M20K, M20L, M20S,	2A3	CAR 3 FAR 23	1	Original 5/1/2013	
	M20M, M20R	2A3	CAR 3 FAR 23	1	Original 5/1/2013	
Mooney (Mooney Aircraft Corporation)	M22	A6SW	CAR 3	1	Original 5/1/2013	
Morane-Saulnier (SOCATA - Groupe Aerospatiale) [Rallye]	M.S. 760, M.S. 760 A, M.S. 760 B	7A3	CAR 3	1	Original 5/1/2013	
NARDI (NARDI S.A.) [Siai Marchetti]	FN-333	7A5	CAR 3	1	Original 5/1/2013	
Navion (Sierra Hotel Aero, Inc.) [Navion; North American; Ryan Aeronautical; Base Ind; Kotowicz; Thompson; Klinger; Diamond Aero]	Navion (L-17A), Navion A (L-17B; L-17C), Navion B, Navion D, Navion E, Navion F, Navion G, Navion H	A-782	CAR 3	1	Original 5/1/2013	
PACIFIC AEROSPACE LIMITED (Pacific Aerospace Limited) [Pacific Aerospace Corporation, Ltd.]	750XL	A50CE	FAR 21 FAR 23	1	Original 5/1/2013	3
PIAGGIO (Industrie Aeronautiche e Meccaniche Rinaldo Piaggio S.p.A.) [Piaggio & Co.; Industrie Aeronautiche E Meccaniche]	P.166, P.166B, P.166C, P.166 DL3	7A4	CAR 3 FAR 21 FAR 23	1	Original 5/1/2013	
PIAGGIO (Piaggio & C.)	P.136-L, P.136-L1, P.136-L2	A-813	CAR 3	1	Original 5/1/2013	
PIAGGIO (Piaggio Aero Industries S.p.A)	PIAGGIO P-180	A59EU	FAR 21 FAR 23	1	Original 5/1/2013	1

Issued: May 1, 2013
Revised: 21-July-2016

U.S Department of Transportation
Federal Aviation Administration

MAJOR REPAIR AND ALTERATION
(Airframe, Powerplant, Propeller, or Appliance)

Form Approved
OMB No. 2120-0020

For FAA Use Only

Office Identification

INSTRUCTIONS: Print or type all entries. See FAR 43.9, FAR 43 Appendix B, and AC 43.9-1 (or subsequent revision thereof) for instructions and disposition of this form. This report is required by law (49 U.S.C. 1421). Failure to report can result in a civil penalty not to exceed $1,000 for each such violation (Section 901 Federal Aviation Act 1958)

1. Aircraft	Make Mooney	Model M20J
	Serial No. 24-1563	Nationality and Registration Mark N5813F
2. Owner	Name *(As shown on registration certificate)* Steve Koenigsknecht	Address *(As shown on registration certificate)* 935 Robinson Lake Rd Trout Creek MI 49967

3. For FAA Use Only

4. Unit Identification / **5. Type**

Unit	Make	Model	Serial No.	Repair	Alteration
AIRFRAME	~~~~~~~~~~~~~~~~~~~~~~~~~~*(As described in item 1 above)*~~~~~~~~~~~~~~~~~~~~~~~~~~				X
POWERPLANT					
PROPELLER					
APPLIANCE	Type				
	Manufacturer				

6. Conformity Statement

A. Agency's Name and Address	B. Kind of Agency	C. Certificate No.
Superior Aviation. Inc. 250 Riverhills Road Kingsford. MI 49802	☐ U.S. Certified Mechanic ☐ Foreign Certified Mechanic X Certified Repair Station ☐ Manufacturer	EATR437D Airframe Class 3 Radio Class 1 & 2

D. I certify that the repair and/or alteration made to the unit(s) identified in item 4 above and described on the reverse or attachments hereto have been made in accordance with the requirements of Part 43 of the U.S. Federal Aviation Regulations and that the information furnished herein is true and correct to the best of my knowledge.

Date	Signature of Authorized Individual
May 17, 2007	John M Sersich

7. Approval for Return to Service

Pursuant to the authority given persons specified below, the unit identified in item 4 was inspected in the manner prescribed by the Administrator of the Federal Aviation Administration and is X APPROVED ☐ REJECTED

BY							
		FAA Flt Standards Inspector		Manufacturer		Inspection Authorization	Other *(Specify)*
		FAA Designee	X	Repair Station		Person Approved by Transport Canada Airworthiness Group	

Date of Approval or Rejection	Certificate or Designation No.	Signature of Authorized Individual
May 17, 2007	EATR437D	John M Sersich

FAA Form 337 (12-88)

NOTICE

Weight and balance or operating limitation changes shall be entered in the appropriate aircraft record. An alteration must be compatible with all previous alterations to assure continued conformity with the applicable airworthiness requirements.

8. Description of Work Accomplished

(If more space is required, attach additional sheets. Identify with aircraft nationality and registration mark and date work completed.)

Validated that the previous installation of the number one GNS 530 in this aircraft and all interfaced equipment are covered under the STC AML. Removed the GNS 530 and upgraded to GNS 530W unit.

A summary of the modification done to the aircraft is as follows:

1. Removed the number one (1) Garmin GA 56 Antenna, P/N 011-00134-00 and installed one (1) new GA 35 GPS/WAAS Antenna P/N 013-00235-00, S/N 17538 using the provisions left behind from the standard antenna IAW Garmin upgrade manual P/N 190-00357-06 Rev B and STC no. SA01933LA.
2. Removed Garmin GNS 530 P/N 011-00550-10 unit and installed Garmin GNS 530W, P/N 011-01064-40, S/N 78416170, using the provisions left behind from the standard 530 unit. Installation done IAW Garmin upgrade manual P/N 190-00357-06 Rev Band STC no. SA01933LA.
3. The GNS 530W was configured identical to the original 530 unit. Each interface was checked out IAW the 530W Installation Manual P/N 190-00357-02 Section 5. A copy of the checkout log was completed and included with the aircraft maintenance records.
4. Installed GNS 530W AFMS P/N 190-00357-63, FAA Approved date 12/21/2006 into the Aircraft Flight manual.
5. Updated the aircraft Equipment List and Weight and Balance to reflect the new WAAS units. The current electrical load Analysis remains valid since the new unit draws the same or less current than the original unit.

Included Garmin document P/N 190-00357-65, GNS 530W Instructions for Continued Airworthiness in the aircraft maintenance records.

Note: This ICA supersedes data for the previously installed GNS 530.

The End

☐ Additional Sheets Are Attached

U.S Department of Transportation
Federal Aviation Administration

MAJOR REPAIR AND ALTERATION
(Airframe, Powerplant, Propeller, or Appliance)

Form Approved
OMB No. 2120-0020

For FAA Use Only

Office Identification GL09

INSTRUCTIONS: Print or type all entries. See FAR 43.9, FAR 43 Appendix B, and AC 43.9-1 (or subsequent revision thereof) for instructions and disposition of this form. This report is required by law (49 U.S.C. 1421). Failure to report can result in a civil penalty not to exceed $1,000 for each such violation (Section 901 Federal Aviation Act 1958)

1. Aircraft	Make: Mooney	Model: M20J
	Serial No.: 24-1563	Nationality and Registration Mark: N5813F
2. Owner	Name *(As shown on registration certificate)*: Koenigsknecht Steven J	Address *(As shown on registration certificate)*: 935 Robinson Lake Rd. Trout Creek, MI 49967-9516

3. For FAA Use Only

The data identified herein complies with the applicable airworthiness requirements and is approved for the above described aircraft, subject to conformity inspection by a person authorized in FAR Part 43, Section 43.7.

6209 — District Office
8-17-06 — Date
Ralph J Payne — Signature of FAA Inspector

4. Unit Identification / **5. Type**

Unit	Make	Model	Serial No.	Repair	Alteration
AIRFRAME	~~~~~~~~~~~~~~~~~~~~~~(As described in item 1 above)~~~~~~~~~~~~~~~~~~~~~~				X
POWERPLANT					
PROPELLER					
APPLIANCE	Type				
	Manufacturer				

6. Conformity Statement

A. Agency's Name and Address	B. Kind of Agency	C. Certificate No.
Superior Aviation, Inc 250 Riverhills Rd. Kingsford, MI 49802	☐ U.S. Certified Mechanic ☐ Foreign Certified Mechanic x Certified Repair Station ☐ Manufacturer	EATR437D Airframe Class 3 Radio Class 1 & 2

D. I certify that the repair and/or alteration made to the unit(s) identified in item 4 above and described on the reverse or attachments hereto have been made in accordance with the requirements of Part 43 of the U.S. Federal Aviation Regulations and that the information furnished herein is true and correct to the best of my knowledge.

Date	Signature of Authorized Individual
August 17, 2006	John M Sersich

7. Approval for Return to Service

Pursuant to the authority given persons specified below, the unit identified in item 4 was inspected in the manner prescribed by the Administrator of the Federal Aviation Administration and is [X] APPROVED [ ] REJECTED

BY							Other *(Specify)*
		FAA Flt Standards Inspector		Manufacturer		Inspection Authorization	
		FAA Designee	X	Repair Station		Person Approved by Transport Canada Airworthiness Group	

Date of Approval or Rejection	Certificate or Designation No.	Signature of Authorized Individual
August 17, 2006	EATR437D	John M Sersich

FAA Form 337 (12-88)

RECEIVED
AUG 28 2006
By:

NOTICE

Weight and balance or operating limitation changes shall be entered in the appropriate aircraft record. An alteration must be compatible with all previous alterations to assure continued conformity with the applicable airworthiness requirements.

8. Description of Work Accomplished

(If more space is required, attach additional sheets. Identify with aircraft nationality and registration mark and date work completed.)

Submission of flight test data and Flight Manual Supplement, Garmin GNS 530, S/N 78416170 for VFR/IFR Enroute, Terminal, and Non-Precision Approaches.

The factory installed "Non-Advisory Terrain" was functional checked in accordance with the Post Installation Check Out Procedure as described within 500 Series Installation Manual P/N 190-00181-02, Rev Q, with FAA Approved Addendum, Garmin P/N 190-00181-16, dated April 10, 2006 inserted into the FAA approved Supplement to the Airplane Flight Manual, the pilot or flight crew must refer to Garmin Optional Displays Pilot's Guide Addendum, Garmin International P/N 190-00140-13, Rev. G (or later FAA approved revision), for operational procedures for use of the Terrain functionality.

The Garmin GNS 530 VHF Communications / VOR/ILS Receiver / GPS Receiver was previously installed on FAA Form 337 dated June 28, 2006, with component locations indicated and with aircraft interface as follows:

The GNS 530 was coupled to the Pilot's Bendix/King KI525A HSI, GTX 330 Mode S Transponder/TIS, altitude encoder, GMA347 audio panel, Bendix/King KFC200 AP/FD.

The GNS530 was initially certified for VFR/IFR Enroute, Terminal, and Non-Precision Approaches under STC#SA00864WI.

The system has been installed and functionally checked in accordance with the following:

1. The installation complies with provisions of AC20-138 and found to function properly and safely.

2. The aircraft was flown and found to meet the accuracy requirements set forth in AC20-138 for VFR/IFR Enroute, Terminal, and Non-Precision Approaches.

3. FAA approved Supplement to the Airplane Flight Manual dated AUG 1 7 2006 and GARMIN Pilot's Guide, P/N 190-00181-00, Rev A, dated April 2000 (or later appropriate revision), must be immediately available to the Flight Crew whenever navigation is predicated upon the use of the GPS system.

   Note: Upon completion of the FAA Form 337, this GNS 530 is approved for IFR Enroute, Terminal, and Non-Precision Approach operations and the placard "GNS 530 GPS Not Approved For IFR" may be removed.

The End

☐ Additional Sheets Are Attached

Installation Center

Garmin GNS 530 VHF Communications Transceiver / VOR/ILS Receiver / GPS Receiver

Repair Station # EATR437D

Name: Superior Aviation, Inc.

Address: 250 Riverhills Road

Kingsford, MI

FAA APPROVED FLIGHT MANUAL SUPPLEMENT GARMIN GNS 530 VHF COMMUNICATIONS TRANSCEIVER / VOR/ILS RECEIVER / GPS RECEIVER

AIRCRAFT MAKE: MOONEY

AIRCRAFT MODEL: M20J

AIRCRAFT SERIAL NO.: 24-1563

This document must be carried in the aircraft at all times. It describes the operating procedures for the Garmin GNS 530 navigation system when it has been installed in accordance with Garmin Installation Manual 190-00181-02 Rev. L (Rev. A or later) and FAA Form 337 dated AUG 1 7 2006.

For aircraft with an FAA Approved Airplane Flight Manual, this document serves as the FAA Approved Flight Manual Supplement for the Garmin GNS 530. For aircraft that do not have an approved flight manual, this document serves as the FAA Approved Supplemental Flight Manual for the Garmin GNS 530.

The Information contained herein supplements or supersedes the basic Airplane Flight Manual only in those areas listed herein. For limitations, procedures, and performance information not contained in this document, consult the basic Airplane Flight Manual.

FAA APPROVED

Ralph J Payne Date: AUG 1 7 2006

Principal Inspector
GRR FSDO
Grand Rapids, MI

LOG OF REVISIONS			
Revision Number	Page Number	Description	Date of Approval
	ALL	Initial Release	

AUG 1 7 2006

Aircraft Make: Mooney
Aircraft Model: M20J
Aircraft Serial Number: 24-1563

Garmin GNS 530 VHF Communications Transceiver / VOR/ILS Receiver / GPS Receiver

Table of Contents

SECTION I
GENERAL

1. The GNS 530 System is a fully integrated, panel mounted instrument, which contains a VHF Communications Transceiver, a VOR/ILS receiver, and a Global Positioning System (GPS) Navigation computer. The system consists of a GPS antenna, GPS Receiver, VHF VOR/LOC/GS antenna, VOR/ILS receiver, VHF COMM antenna and a VHF Communications Transceiver. The primary function of the VHF Communication portion of the equipment is to facilitate communication with Air Traffic Control. The primary function of the VOR/ILS Receiver portion of the equipment is to receive and demodulate VOR, Localizer, and Glide Slope signals. The primary function of the GPS portion of the system is to acquire signals from the GPS system satellites, recover orbital data, make range and Doppler measurements, and process this information in real-time to obtain the user's position, velocity, and time.

2. Provided the Garmin GNS 530's GPS receiver is receiving adequate usable signals, it has been demonstrated capable of and has been shown to meet the accuracy specifications for:

   - VFR/IFR enroute, terminal, and non-precision instrument approach (GPS, Loran-C, VOR, VOR-DME, TACAN, NDB, NDB-DME, RNAV) operation within the U.S. National Airspace System in accordance with AC 20-138.

   - One of the approved sensors, for a single or dual GNS 530 installation, for North Atlantic Minimum Navigation Performance Specification (MNPS) Airspace in accordance with AC 91-49 and AC 120-33.

   - The system meets RNP5 airspace (BRNAV) requirements of AC 90-96 and in accordance with AC 20-138, and JAA GAI-20 ACJ 20X4, provided it is receiving usable navigation information from the GPS receiver.

   Navigation is accomplished using the WGS-84 (NAD-83) coordinate reference datum. Navigation data is based upon use of only the Global Positioning System (GPS) operated by the United States of America.

SECTION II
LIMITATIONS

1. The Garmin GNS 530 Pilot's Guide, P/N 190-00181-00, Rev. A, dated April, 2000, or later appropriate revision, must be immediately available to the flight crew whenever navigation is predicated on the use of the system. In addition to the Pilot's Guide, the appropriate Pilot's Guide Addendum also must be immediately available to the flight crew if lightning detection or traffic advisory equipment is interfaced to the system.

2. The GNS 530 must utilize the following or later FAA approved software versions:

Function	**Sub-System Version**				
	Main	GPS	COM	VOR/LOC	G/S
Initial Approval	2.00	2.00	1.22	1.25	2.00
Traffic / Weather Interface	2.08	2.00	1.22	1.25	2.00
TIS Interface	4.00	2.00	1.22	1.25	2.00

The Main software version is displayed on the GNS 530 self test page immediately after turn-on for 5 seconds. The remaining system software versions can be verified on the AUX group sub-page 2, "SOFTWARE/DATABASE VER".

3. IFR enroute and terminal navigation predicated upon the GNS 530's GPS Receiver is prohibited unless the pilot verifies the currency of the data base or verifies each selected waypoint for accuracy by reference to current approved data.

4. Instrument approach navigation predicated upon the GNS 530's GPS Receiver must be accomplished in accordance with approved instrument approach procedures that are retrieved from the GPS equipment data base. The GPS equipment database must incorporate the current update cycle.

   (a) Instrument approaches utilizing the GPS receiver must be conducted in the approach mode and Receiver Autonomous Integrity Monitoring (RAIM) must be available at the Final Approach Fix.

   (b) Accomplishment of ILS, LOC, LOC-BC, LDA, SDF, MLS or any other type of approach not approved for GPS overlay with the GNS 530's GPS receiver is not authorized.

(c) Use of the GNS 530 VOR/ILS receiver to fly approaches not approved for GPS require VOR/ILS navigation data to be present on the external indicator.

(d) When an alternate airport is required by the applicable operating rules, it must be served by an approach based on other than GPS or Loran-C navigation, the aircraft must have the operational equipment capable of using that navigation aid, and the required navigation aid must be operational.

(e) VNAV information may be utilized for advisory information only. Use of VNAV information for Instrument Approach Procedures does not guarantee Step-Down Fix altitude protection, or arrival at approach minimums in normal position to land.

5. If not previously defined, the following default settings must be made in the "SETUP 1" menu of the GNS 530 prior to operation (refer to Pilot's Guide for procedure if necessary):

(a) **dis, spd** ..... nm kt (sets navigation units to "nautical miles" and "knots")
(b) **alt, vs** ..... ft fpm (sets altitude units to "feet" and "feet per minute")
(c) **map datum** .. WGS 84 (sets map datum to WGS-84, see note below)
(d) **posn** ..... deg-min (sets navigation grid units to decimal minutes)

NOTE: In some areas outside the United States, datums other than WGS-84 or NAD-83 may be used. If the GNS 530 is authorized for use by the appropriate Airworthiness authority, the required geodetic datum must be set in the GNS 530 prior to its use for navigation.

SECTION III
EMERGENCY PROCEDURES

ABNORMAL PROCEDURES

1. If Garmin GNS 530 navigation information is not available or invalid, utilize remaining operational navigation equipment as required.

2. If "RAIM POSITION WARNING" message is displayed the system will flag and no longer provide GPS based navigational guidance. The crew should revert to the GNS 530 VOR/ILS receiver or an alternate means of navigation other than the GNS 530's GPS Receiver.

3. If "RAIM IS NOT AVAILABLE" message is displayed in the enroute, terminal, or initial approach phase of flight, continue to navigate using the GPS equipment or revert to an alternate means of navigation other than the GNS 530's GPS receiver appropriate to the route and phase of flight. When continuing to use GPS navigation, position must be verified every 15 minutes using the GNS 530's VOR/ILS receiver or another IFR-approved navigation system.

4. If "RAIM IS NOT AVAILABLE" message is displayed while on the final approach segment, GPS based navigation will continue for up to 5 minutes with approach CDI sensitivity (0.3 nautical mile). After 5 minutes the system will flag and no longer provide course guidance with approach sensitivity. Missed approach course guidance may still be available with 1 nautical mile CDI sensitivity by executing the missed approach.

5. In an in-flight emergency, depressing and holding the Comm transfer button for 2 seconds will select the emergency frequency of 121.500 MHz into the "Active" frequency window.

SECTION IV
NORMAL PROCEDURES

1. DETAILED OPERATING PROCEDURES

Normal operating procedures are described in the Garmin GNS 530 Pilot's Guide, P/N 190-00181-00, Rev.A, dated April 2000, or later appropriate revision. Normal operating procedures for the Traffic Information Service (TIS) interface and the Weather Data Link interface are described in the 400/500 Series Garmin Display Interfaces Pilot's Guide Addendum, P/N 190-00140-13, Rev B, dated September 2004 or later appropriate revision.

2. PILOT'S DISPLAY

The GNS 530 System data will appear on the Pilot's Bendix/King KI 525A HSI. The source of data is either GPS or VLOC as annunciated on the display above the CDI key of the GNS 530.

NOTE: It is the pilot's responsibility to assure that published or assigned procedures are correctly complied with. Course guidance is not provided for all possible ARINC 424 leg types. See the GNS 530 Pilot's Guide for detailed operating procedures regarding navigation capabilities for specific ARINC 424 leg types.

3. AUTOPILOT / FLIGHT DIRECTOR OPERATION

Coupling of the GNS 530 System steering information to the Bendix/King KFC 200 autopilot/FD can be accomplished by engaging the autopilot in the NAV/GPSS or APR mode.

When the autopilot/flight director system is using course information supplied by the GNS 530 System and the course pointer is not automatically driven to the desired track, the course pointer on the HSI must be manually set to the desired track (DTK) indicated by the GNS 530. For detailed autopilot/flight director operational instructions, refer to the FAA Approved Flight Manual Supplement for the Bendix/King KFC 200 autopilot.

4. CROSSFILL OPERATIONS

Crossfill capabilities exist between the GNS 530 and GNS 430 Systems. Refer to the Garmin GNS 530 Pilot's Guide for detailed crossfill operating instructions.

5. AUTOMATIC LOCALIZER COURSE CAPTURE

By default, the GNS 530 automatic localizer course capture feature is enabled. This feature provides a method for system navigation data present on the external indicators to be switched automatically from GPS guidance to localizer / glide slope guidance as the aircraft approaches the localizer course inbound to the final approach fix. If an offset from the final approach course is being flown, it is possible that the automatic switch from GPS course guidance to localizer / glide slope course guidance will not occur. It is the pilot's responsibility to ensure correct system navigation data is present on the external indicator before continuing a localizer based approach beyond the final approach fix. Refer to the GNS 530 Pilot's Guide for detailed operating instructions.

6. DISPLAY OF LIGHTNING STRIKE DATA

N/A

7. DISPLAY OF TRAFFIC ADVISORY DATA

N/A

8. DISPLAY OF TRAFFIC INFORMATION SERVICE DATA

TIS surveillance data uplinked by Air Traffic Control (ATC) radar through the GTX 330 Mode S Transponder will appear on the moving map and traffic display pages of the GNS 530. For detailed operating instructions regarding the interface of the GNS 530 with the GTX 330, refer to the 400/500 Series Garmin Display Interfaces Pilot's Guide Addendum, P/N 190-00140-13, Rev B, dated September 2004, or later appropriate revision, for the TIS System interface.

SECTION V
PERFORMANCE

No change.

SECTION VI
WEIGHT AND BALANCE

See current weight and balance data.

SECTION VII
AIRPLANE & SYSTEM DESCRIPTIONS

See GNS 530 Pilot's Guide for a complete description of the GNS 530 system.

U.S Department of Transportation
Federal Aviation Administration

MAJOR REPAIR AND ALTERATION
(Airframe, Powerplant, Propeller, or Appliance)

Form Approved
OMB No. 2120-0020

For FAA Use Only

Office Identification
GL09

INSTRUCTIONS: Print or type all entries. See FAR 43.9, FAR 43 Appendix B, and AC 43.9-1 (or subsequent revision thereof) for instructions and disposition of this form. This report is required by law (49 U.S.C. 1421). Failure to report can result in a civil penalty not to exceed $1,000 for each such violation (Section 901 Federal Aviation Act 1958)

1. Aircraft	Make: Mooney	Model: M20J
	Serial No.: 24-1563	Nationality and Registration Mark: N5813F
2. Owner	Name *(As shown on registration certificate)*: Koenigsknecht Steven J	Address *(As shown on registration certificate)*: 935 Robinson Lake Rd. Trout Creek, MI 49967-9516

3. For FAA Use Only

4. Unit Identification / **5. Type**

Unit	Make	Model	Serial No.	Repair	Alteration
AIRFRAME	*(As described in item 1 above)*				X
POWERPLANT					
PROPELLER					
APPLIANCE	Type				
	Manufacturer				

RECEIVED
JUL 21 2006
BY:

6. Conformity Statement

A. Agency's Name and Address	B. Kind of Agency	C. Certificate No.
Superior Aviation, Inc. 250 Riverhills Road Kingsford, MI 49802	☐ U.S. Certified Mechanic ☐ Foreign Certified Mechanic X Certified Repair Station ☐ Manufacturer	EATR437D Airframe Class 3 Radio Class 1 & 2

D. I certify that the repair and/or alteration made to the unit(s) identified in item 4 above and described on the reverse or attachments hereto have been made in accordance with the requirements of Part 43 of the U.S. Federal Aviation Regulations and that the information furnished herein is true and correct to the best of my knowledge.

Date	Signature of Authorized Individual
JUNE 28, 2006	JOHN M. SERSICH

7. Approval for Return to Service

Pursuant to the authority given persons specified below, the unit identified in item 4 was inspected in the manner prescribed by the Administrator of the Federal Aviation Administration and is [X] APPROVED [ ] REJECTED

BY							Other *(Specify)*
		FAA Flt Standards Inspector		Manufacturer		Inspection Authorization	
		FAA Designee	X	Repair Station		Person Approved by Transport Canada Airworthiness Group	

Date of Approval or Rejection	Certificate or Designation No.	Signature of Authorized Individual
JUNE 28, 2006	EATR437D	JOHN M. SERSICH

FAA Form 337 (12-88)

NOTICE

Weight and balance or operating limitation changes shall be entered in the appropriate aircraft record. An alteration must be compatible with all previous alterations to assure continued conformity with the applicable airworthiness requirements.

8. Description of Work Accomplished

(If more space is required, attach additional sheets. Identify with aircraft nationality and registration mark and date work completed.)

Installation of dual Garmin GA56, P/N 010-10040-01, GPS antennas and antenna doubler mounting plates.

(Fig. 1)

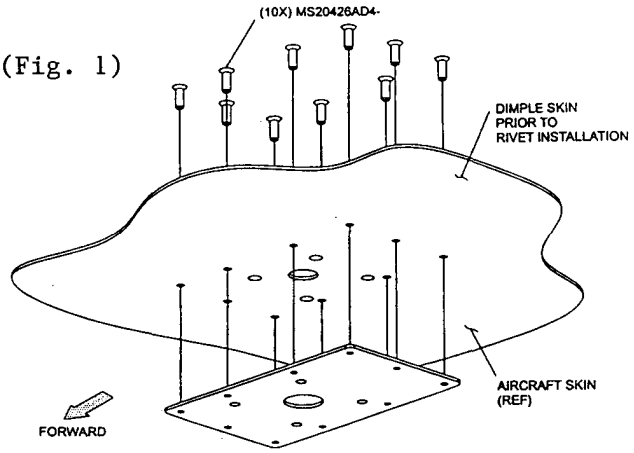

(Fig. 2)

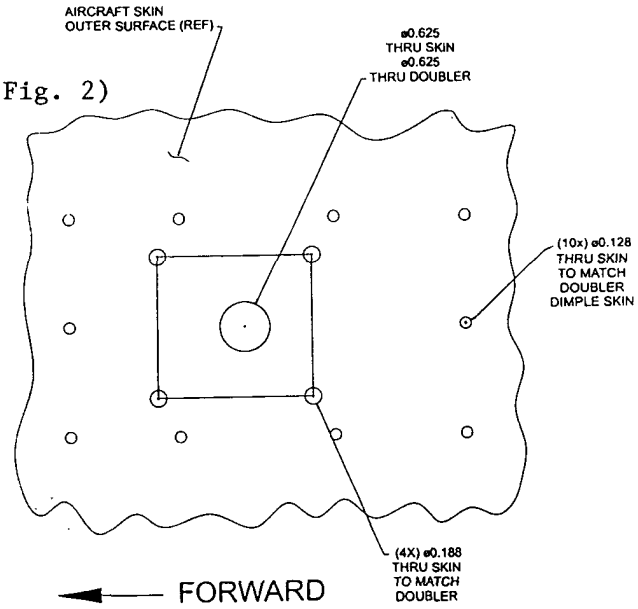

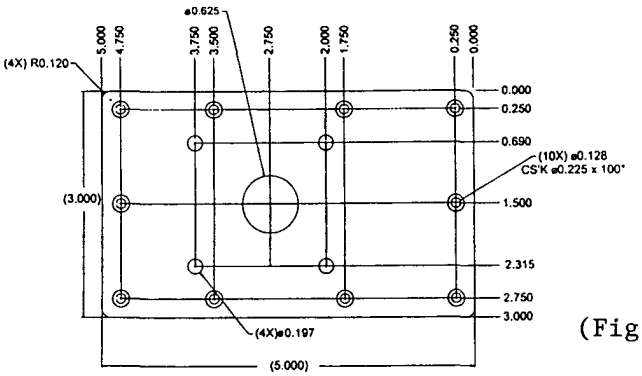

(Fig. 3)

Aircraft skin thickness 0.025 with antennas being mounted topside on opposing sides at fuselage station 118.

Materials:

1. 10 ea MS20426AD4-3.0 countersunk rivets
2. Doublers 0.025 in thickness, holes & edges deburred - meets 2024-T3.
3. RTV162 was applied to the outer edge of the GA56 antennas following installation to prevent moisture contamination.

The GA56 antennas and doublers were installed in accordance with AC43.13-1B and AC43.13-2A. Refer to instructions for continued airworthiness for the above aircraft on FAA Form 337 - GNS 530/430 dated JUNE 28, 2006.

The End

☐ Additional Sheets Are Attached

U.S.GPO:1989-0-663-171

U.S Department of Transportation
Federal Aviation Administration

MAJOR REPAIR AND ALTERATION
(Airframe, Powerplant, Propeller, or Appliance)

Form Approved
OMB No. 2120-0020

For FAA Use Only
Office Identification
GL09

INSTRUCTIONS: Print or type all entries. See FAR 43.9, FAR 43 Appendix B, and AC 43.9-1 (or subsequent revision thereof) for instructions and disposition of this form. This report is required by law (49 U.S.C. 1421). Failure to report can result in a civil penalty not to exceed $1,000 for each such violation (Section 901 Federal Aviation Act 1958)

1. Aircraft	Make: Mooney	Model: M20J
	Serial No.: 24-1563	Nationality and Registration Mark: N5813F
2. Owner	Name *(As shown on registration certificate)*: Koenigsknecht Steven J	Address *(As shown on registration certificate)*: 935 Robinson Lake Rd. Trout Creek, MI 49967-9516

3. For FAA Use Only

4. Unit Identification				**5. Type**	
Unit	Make	Model	Serial No.	Repair	Alteration
AIRFRAME	*(As described in item 1 above)*				X
POWERPLANT					
PROPELLER					
APPLIANCE	Type				
	Manufacturer				

RECEIVED
JUL 12 2006
BY:

6. Conformity Statement

A. Agency's Name and Address	B. Kind of Agency	C. Certificate No.
Superior Aviation, Inc. 250 Riverhills Road Kingsford, MI 49802	☐ U.S. Certified Mechanic ☐ Foreign Certified Mechanic X Certified Repair Station ☐ Manufacturer	EATR437D Airframe Class 3 Radio Class 1 & 2

D. I certify that the repair and/or alteration made to the unit(s) identified in item 4 above and described on the reverse or attachments hereto have been made in accordance with the requirements of Part 43 of the U.S. Federal Aviation Regulations and that the information furnished herein is true and correct to the best of my knowledge.

Date	Signature of Authorized Individual
June 28, 2006	John M Sersich

7. Approval for Return to Service

Pursuant to the authority given persons specified below, the unit identified in item 4 was inspected in the manner prescribed by the Administrator of the Federal Aviation Administration and is X APPROVED ☐ REJECTED

BY							Other *(Specify)*
		FAA Flt Standards Inspector		Manufacturer		Inspection Authorization	
		FAA Designee	X	Repair Station		Person Approved by Transport Canada Airworthiness Group	

Date of Approval or Rejection	Certificate or Designation No.	Signature of Authorized Individual
June 28, 2006	EATR437D	John M Sersich

FAA Form 337 (12-88)

NOTICE

Weight and balance or operating limitation changes shall be entered in the appropriate aircraft record. An alteration must be compatible with all previous alterations to assure continued conformity with the applicable airworthiness requirements.

8. Description of Work Accomplished

(If more space is required, attach additional sheets. Identify with aircraft nationality and registration mark and date work completed.)

Installed in accordance with STC#SA01487SE and Garmin Supplemental Type Certificate Master Data List, P/N 005-C0217-00, Revision A, Garmin GDL 69 XM Satellite Receiver.

The GDL 69 XM Satellite Receiver was installed on the rear avionics shelf at fuselage station 122.00 with the GX 55 XM Satelitte Antenna installed at fuselage station 92.00 with interface to the number one GNS530and number two Garmin GNS 430. The aircraft owner was supplied with Garmin 400/500 Series Display Interface Pilot's Guide Addendum, P/N 190-00140-13.

Included are Instructions for Continued Airworthiness (ICA), to comply with FAA Handbook Bulletin for Airworthiness (HBA W98-18 dated Oct 7, 1998) and is applicable to the Mooney Model: M20J, S/N: 24-1563, Reg. No.: N5813F for the installation of the Garmin GDL 69 XM Satellite system.

The equipment as installed above, AC43.13-1B and AC43.13-2A ground and flight checked satisfactorily with no adverse effects noted upon existing aircraft equipment. Recomputed the acft weight & balance and revised the equipment list – made the appropriate log book entry.

Instructions for Continued Airworthiness: GDL 69

1. Refer to Block 8.
2. Refer to Block 8.
3. Refer to Garmin 400/500 Series Display Interface Pilot's Guide Addendum, P/N 190-00140-13.
4. N/A
5. Maintenance of the GDL 69 is **"on condition only"**. Periodic Maintenance is not required. Adhere to the provisions of Appendix D to Part 43, paragraph i in the performance of an Annual or 100 Hr Inspection and in accordance with Periodic Inspections as specified in the Mooney M20J Service and Maintenance Manual.
6. N/A
7. Refer to Section 2 of the GDL 69 Installation Manual, P/N 190-00355-02, Rev. B. If the unit is removed and reinstalled a functional check of the GDL 69 should be conducted in accordance with Section 4.4 of the GDL 69 Installation Manual, P/N 190-00355-02, Rev. B.
8. Refer to Block 8.
9. N/A
10. N/A
11. Antenna installation, removal and replacement should be in accordance with applicable provisions of AC43.13-1B and AC43.13-2A.
12. NONE
13. N/A
14. NONE
15. N/A
16. To revise this ICA a letter must be submitted to the local FSDO with a copy of the revised Form 337, and revised ICA. The FAA Inspector accepts the changes by signing Block 3 and including the following Statement:
    "The attached revised/new Instructions for Continued Airworthiness dated _____ for the above aircraft or component major alteration have been accepted by the FAA, superceding the Instructions for Continued Airworthiness dated _____.

THE END

☐ Additional Sheets Are Attached

U.S Department of Transportation
Federal Aviation Administration

MAJOR REPAIR AND ALTERATION
(Airframe, Powerplant, Propeller, or Appliance)

Form Approved
OMB No. 2120-0020

For FAA Use Only

Office Identification GL09

INSTRUCTIONS: Print or type all entries. See FAR 43.9, FAR 43 Appendix B, and AC 43.9-1 (or subsequent revision thereof) for instructions and disposition of this form. This report is required by law (49 U.S.C. 1421). Failure to report can result in a civil penalty not to exceed $1,000 for each such violation (Section 901 Federal Aviation Act 1958)

1. Aircraft	Make: Mooney	Model: M20J
	Serial No.: 24-1563	Nationality and Registration Mark: N5813F
2. Owner	Name *(As shown on registration certificate)*: Koenigsknecht Steven J	Address *(As shown on registration certificate)*: 935 Robinson Lake Rd. Trout Creek, MI 49967-9516

3. For FAA Use Only

The data identified herein complies with the applicable airworthiness requirements and is approved for the above described aircraft, subject to conformity inspection by a person authorized in FAR Part 43, Section 43.7.

GL09 — District Office
6-28-06 — Date
Ralph A Payne — Signature of FAA Inspector

4. Unit Identification / **5. Type**

Unit	Make	Model	Serial No.	Repair	Alteration
AIRFRAME	~~~~~~~~~~~~~~~~~~~~~~(As described in item 1 above)~~~~~~~~~~~~~~~~~~~~~~				X
POWERPLANT					
PROPELLER					
APPLIANCE	Type				
	Manufacturer				

RECEIVED
JUL 12 2006
BY:

6. Conformity Statement

A. Agency's Name and Address	B. Kind of Agency	C. Certificate No.
Superior Aviation, Inc. 250 Riverhills Road Kingsford, MI 49802	☐ U.S. Certified Mechanic ☐ Foreign Certified Mechanic X Certified Repair Station ☐ Manufacturer	EATR437D Airframe Class 3 Radio Class 1 & 2

D. I certify that the repair and/or alteration made to the unit(s) identified in item 4 above and described on the reverse or attachments hereto have been made in accordance with the requirements of Part 43 of the U.S. Federal Aviation Regulations and that the information furnished herein is true and correct to the best of my knowledge.

Date	Signature of Authorized Individual
JUNE 28, 2006	JOHN M. SERSICH

7. Approval for Return to Service

Pursuant to the authority given persons specified below, the unit identified in item 4 was inspected in the manner prescribed by the Administrator of the Federal Aviation Administration and is [X] APPROVED [ ] REJECTED

BY							Other *(Specify)*
		FAA Flt Standards Inspector		Manufacturer		Inspection Authorization	
		FAA Designee	X	Repair Station		Person Approved by Transport Canada Airworthiness Group	

Date of Approval or Rejection	Certificate or Designation No.	Signature of Authorized Individual
JUNE 28, 2006	EATR437D	JOHN M. SERSICH

FAA Form 337 (12-88)

NOTICE

Weight and balance or operating limitation changes shall be entered in the appropriate aircraft record. An alteration must be compatible with all previous alterations to assure continued conformity with the applicable airworthiness requirements.

8. Description of Work Accomplished

(If more space is required, attach additional sheets. Identify with aircraft nationality and registration mark and date work completed.)

Page - 1 of 6

Removed: Bendix/King KMA 24 Audio Panel, number one KY 197 Com, KNS 80 RNAV, number two KX 165 Nav/Com, KT 76A Transponder, and II Morrow GX 50 GPS System.

Installed the following:

1. Garmin GMA 347 Audio Panel – Installed at fuselage station 19.00 (in the area vacated by the KMA 24 Audio Panel), with interface to the existing marker beacon antenna system, in accordance with Garmin GMA 347 Installation Manual, P/N 190-00325-01, Rev. A.

   The GMA 347 Audio Panel is FAA approved under TSO C50c (Audio Amplifiers) and TSO C35d (Marker Beacon Receivers). The aircraft owner was supplied with Garmin GMA 347 Pilot's Guide, P/N 190-00325-00,Rev. A.

2. Garmin GNS 530 – Installed at fuselage station 15.00 (in the area vacated by the number one KY 197 and KNS 80), with interface to the existing number one navigation & communication antenna systems, Bendix/King KI 525A HSI, altitude encoder, KFC 200 AP/FD and number one position of the GMA 347 Audio Panel in accordance with Garmin 500 Series Installation Manual, P/N 190-00181-02, Rev. Q.

   The GA 56 GPS antenna was mounted topside at fuselage station 118.00 (refer to FAA Form 337 – GA 56 antenna and doubler installation dated 6-28-06).

   STC#SA00864WI was used as the basis of approval for the installation of the GNS 530. The aircraft owner was supplied with Garmin GNS 530 Pilot's Guide, P/N 190-00181-00, Rev. G, Garmin Optional Display's Pilot's Guide Addendum, P/N 190-00140-13, Rev. G and FAA Approved GNS 530 Terrain Addendum, P/N 190-00181-16, Rev. B.

   Note: GPS portion of the GNS 530 not approved for IFR at this time and VNAV portion is not approved for IFR with placards Installed stating:
   "GNS 530 GPS NOT APPROVED FOR IFR"
   "GNS 530 VNAV NOT APPROVED FOR IFR"

3. Garmin GNS 430 – The GNS 430 was installed at fuselage station 15.00 (in the area vacated by the number two KX 165) with the GNS 430 interfaced to the existing KI 206 CDI, number two navigation & communication antenna systems, altitude encoder, and number two position of the GMA 347 Audio Panel in accordance with Garmin 400 Series Installation Manual, P/N 190-00140-00, Rev. Q.

The GA 56 GPS antenna was mounted topside at fuselage station 118.00 (refer to FAA Form 337 – GA 56 antenna and doubler installation dated 6-28-06).

X Additional Sheets Are Attached

NOTICE

Weight and balance or operating limitation changes shall be entered in the appropriate aircraft record. An alteration must be compatible with all previous alterations to assure continued conformity with the applicable airworthiness requirements.

8. Description of Work Accomplished

(If more space is required, attach additional sheets. Identify with aircraft nationality and registration mark and date work completed.)

Aircraft Make: Mooney
Aircraft Model: M20J
Aircraft S/N: 24-1563
Aircraft Reg. No.: N5813F

STC#SA00705WI was used as the basis of approval for the follow on installation of the GNS 430. The aircraft owner was supplied with Garmin GNS 430 Pilot's Guide, P/N 190-00140-00, Rev. G, Garmin Optional Display's Pilot's Guide Addendum, P/N 190-00140-13, Rev. G and FAA Approved GNS 430 Terrain Addendum, P/N 190-00140-14, Rev. B.

Note: GPS portion of the GNS 430 not approved for IFR at this time with placard installed stating:
"GNS 430 GPS NOT APPROVED FOR IFR"

4. Garmin GTX 330 Mode S Transponder/TIS – Installed at fuselage station 19.25 (in the area vacated by the KT 76A Transponder) with interface to the GNS 530 (main software version 6.01), GNS 430 (main software version 5.01), unmuted input to the GMA 347 Audio Panel, existing altitude encoder, and transponder antenna system in accordance with Garmin GTX 330 Installation Manual, P/N 190-00207-02, Rev. K.

The GTX 330 Mode S Transponder/TIS was tested as required by 14 CFR 91.413 (b) and found to comply with Appendix E of 14 CFR Part 43.

STC#ST01125WI was used as the basis of approval for the follow on installation of the GTX 330. The aircraft owner was supplied with Garmin GTX 330 Pilot's Guide, P/N 190-00207-00, Rev. A and Garmin 400/500 Series Display Interface Pilot's Guide Addendum, P/N 190-00140-13, Rev. G.

FAA approved Supplement to the Airplane Flight Manual dated JUN 2 8 2006 and Garmin 400/500 Series Display Interface Pilot's Guide Addendum, P/N 190-00140-13, Rev. G (or later appropriate revision) must be immediately available to the flight crew whenever flight is predicated upon use of the GTX 330 Traffic Information System – with placard installed so stating.

Included are Instructions for Continued Airworthiness (ICA), to comply with FAA Handbook Bulletin for Airworthiness (HBA W98-18 dated Oct 7, 1998) and is applicable to the Mooney Model: M20J, S/N: 24-1563, Reg. No.: N5813F for the installation of the GMA 347, GNS 530, GNS 430 and GTX 330.

The equipment as installed above, AC43.13-1B, AC43.13-2A, and AC20-138A ground checked satisfactorily with no adverse effects noted upon existing aircraft equipment. Recomputed the acft weight & balance and revised the equipment list – made the appropriate log book entry.

X Additional Sheets Are Attached

NOTICE

Weight and balance or operating limitation changes shall be entered in the appropriate aircraft record. An alteration must be compatible with all previous alterations to assure continued conformity with the applicable airworthiness requirements.

8. Description of Work Accomplished

(If more space is required, attach additional sheets. Identify with aircraft nationality and registration mark and date work completed.)

Aircraft Make: Mooney
Aircraft Model: M20J
Aircraft S/N: 24-1563
Aircraft Reg No.: N5813F

Instructions for Continued Airworthiness: GMA 347

1. Refer to Block 8 - page 1
2. Refer to Block 8 - page 1
3. Refer to the GMA 347 Audio Panel Pilot's Guide, P/N 190-00325-00 Rev. A.
4. N/A
5. Maintenance of the GMA 347 is **"on condition only"**. Periodic maintenance is not required. Refer to the GMA 347 Audio Panel Maintenance Manual, P/N 190-00325-02. Adhere to the provisions of Appendix D to Part 43, paragraph i in the performance of an Annual or 100 Hr inspection and in accordance with Periodic Inspections as specified in the Mooney M20J Service and Maintenance Manual.
6. Refer to the GMA 347 Audio Panel Maintenance Manual, P/N 190-00325-02.
7. Refer to section 2.4 of the GMA 347 Audio Panel Installation Manual, P/N 190-00325-01. If the unit is removed and reinstalled, a functional check of the equipment should be conducted in accordance with section 3 of the GMA 347 Audio Panel Installation Manual, P/N 190-00325-01.
8. Refer to Block 8 – page 1.
9. N/A
10. N/A
11. Antenna installation, removal and replacement should be in accordance with applicable provisions of AC43.13-1B and AC43.13-2A.
12. N/A
13. N/A
14. N/A
15. N/A
16. To revise this ICA, a letter must be submitted to the local FSDO with a copy of the revised Form 337, and revised ICA. The FAA inspector accepts the change by signing Block 3 and including the following Statement:
    "The attached revised/new Instructions for Continued Airworthiness dated _____ for the above aircraft or component major alteration have been accepted by the FAA, superseding the Instructions for Continued Airworthiness dated _____ .

X Additional Sheets Are Attached

NOTICE

Weight and balance or operating limitation changes shall be entered in the appropriate aircraft record. An alteration must be compatible with all previous alterations to assure continued conformity with the applicable airworthiness requirements.

8. Description of Work Accomplished

(If more space is required, attach additional sheets. Identify with aircraft nationality and registration mark and date work completed.)

Aircraft Make: Mooney
Aircraft Model: M20J
Aircraft S/N: 24-1563
Aircraft Reg No.: N5813F

Instructions for Continued Airworthiness: GNS 530

1. Refer to Block 8 – page 1
2. Refer to Block 8 – page 1
3. Refer to the GNS 530 Pilot's Guide, P/N 190-00181-00, Rev. G.
4. For database replacement refer to the GNS 530 Pilot's Guide, P/N 190-00181-00, Rev. G.
5. Maintenance of the GNS 530 is **"on condition only"**. Periodic maintenance is not required. Refer to the 500 Series Maintenance Manual, P/N 190-00181-05, Rev. C (or later appropriate revision). Adhere to the provisions of Appendix D to Part 43, paragraph i in the performance of an Annual or 100 Hr Inspection and in accordance with Periodic Inspections as specified in the Mooney M20J Service and Maintenance Manual.
6. Refer to the 500 Series Maintenance Manual, P/N 190-00181-05, Rev. C. (or later appropriate revision).
7. Refer to section 3.8 of the 500 Series Installation Manual, P/N 190-00181-02, Rev. Q. If the unit is removed and reinstalled a functional check of the equipment should be conducted in accordance with section 5.3 of the 500 Series Installation Manual, P/N 190-00181-02,Rev. Q. Antenna removal, replacement should be made in accordance with applicable provisions of AC43.13-2A and AC43.13-1B.
8. Refer to Block 8 – page 1
9. N/A
10. If required, reseal the GA 56 GPS antenna with RTV 162 (or equivalent) protective sealant.
11. Antenna installation, removal and replacement should be in accordance with applicable provisions of AC43.13-1B and AC43.13-2A.
12. NONE
13. N/A
14. NONE
15. GPS limited to VFR only or in accordance with FAA Approved Flight Manual Supplement.
16. To revise this ICA, a letter must be submitted to the local FSDO with a copy of the revised Form 337, and revised ICA. The FAA Inspector accepts the change by signing Block 3 and including the following statement:
    "The attached revised/new Instructions for Continued Airworthiness dated _____ for the above aircraft or component major alteration have been accepted by the FAA, superseding the Instructions for Continued Airworthiness dated _____ .

X Additional Sheets Are Attached

NOTICE

Weight and balance or operating limitation changes shall be entered in the appropriate aircraft record. An alteration must be compatible with all previous alterations to assure continued conformity with the applicable airworthiness requirements.

8. Description of Work Accomplished

(If more space is required, attach additional sheets. Identify with aircraft nationality and registration mark and date work completed.)

Aircraft Make: Mooney
Aircraft Model: M20J
Aircraft S/N: 24-1563
Aircraft Reg No.: N5813F

Instructions for Continued Airworthiness: GNS 430

1. Refer to Block 8 – page 1
2. Refer to Block 8 – page 1
3. Refer to the GNS 430 Pilot's Guide, P/N 190-00140-00, Rev. G.
4. For database replacement refer to the GNS 430 Pilot's Guide, P/N 190-00140-00, Rev. G.
5. Maintenance of the GNS 430 is **"on condition only"**. Periodic maintenance is not required. Refer to the 400 Series Maintenance Manual, P/N 190-00140-05, Rev C (or later appropriate revision). Adhere to the provisions of Appendix D to Part 43, paragraph i in the performance of an Annual or 100 Hr Inspection and in accordance with Periodic Inspections as specified in the Mooney M20J Service and Maintenance Manual.
6. Refer to the 400 Series Maintenance Manual, P/N 190-00140-05, Rev. C (or later appropriate revision).
7. Refer to section 3.8 of the 400 Series Installation Manual, P/N 190-00140-02, Rev. Q. If the unit is removed and reinstalled a functional check of the equipment should be conducted in accordance with section 5.3 of the 400 Series Installation Manual, P/N 190-00140-02, Rev. Q. Antenna removal, replacement should be made in accordance with applicable provisions of AC43.13-2A and AC43.13-1B.
8. Refer to Block 8 – page 1
9. N/A
10. If required, reseal the GA 56 GPS antenna with RTV 162 (or equivalent) protective sealant.
11. Antenna installation, removal and replacement should be in accordance with applicable provisions of AC43.13-1B and AC43.13-2A.
12. NONE
13. N/A
14. NONE
15. GPS limited to VFR only or in accordance with FAA Approved Flight Manual Supplement.
16. To revise this ICA, a letter must be submitted to the local FSDO with a copy of the revised Form 337, and revised ICA. The FAA Inspector accepts the change by signing Block 3 and including the following statement:
    "The attached revised/new Instructions for Continued Airworthiness dated _____ for the above aircraft or component major alteration have been accepted by the FAA, superseding the Instructions for Continued Airworthiness dated _____ .

X Additional Sheets Are Attached

NOTICE

Weight and balance or operating limitation changes shall be entered in the appropriate aircraft record. An alteration must be compatible with all previous alterations to assure continued conformity with the applicable airworthiness requirements.

8. Description of Work Accomplished

(If more space is required, attach additional sheets. Identify with aircraft nationality and registration mark and date work completed.)

Aircraft Make: Mooney
Aircraft Model: M20J
Aircraft S/N: 24-1563
Aircraft Reg. No.: N5813F

Instructions for Continued Airworthiness: GTX 330

1. Refer to Block 8 – page 2.
2. Refer to Block 8 – page 2.
3. Refer to the GTX 330 Pilot's Guide, P/N 190-00207-00, Rev. A.
4. N/A
5. Maintenance of the GTX 330 is **"on condition only"**. Periodic maintenance is not required. Refer to the GTX 330 Maintenance Manual, P/N 190-00207-05, Rev. B (or later appropriate revision). Adhere to the provisions of Appendix D to Part 43, paragraph i in the performance of an Annual or 100 Hr Inspection and in accordance with Periodic Inspections as specified in the Mooney M20J Service and Maintenance Manual.
6. Refer to the GTX 330 Maintenance Manual, P/N 190-00207-05, Rev. B (or later appropriate revision).
7. Refer to Section 2 of the GTX 330 Installation Manual, P/N 190-00207-02, Rev. K. If the unit is removed and reinstalled a functional check of the GTX 330 should be conducted in accordance with Section 5 of the GTX 330 Installation Manual, P/N 190-00207-02, Rev. K.
8. Refer to Block 8 – page 2.
9. N/A
10. N/A
11. Antenna installation, removal and replacement should be in accordance with applicable provisions of AC43.13-1B and AC43.13-2A.
12. NONE
13. N/A
14. NONE
15. N/A
16. To revise this ICA a letter must be submitted to the local FSDO with a copy of the revised Form 337, and revised ICA. The FAA Inspector accepts the change by signing Block 3 and including the following statement:
    "The attached revised/new Instructions for Continued Airworthiness dated _____ for the above aircraft or component major alteration have been accepted by the FAA, superseding the Instructions for Continued Airworthiness dated _____ .

The End

US Department of Transportation
Federal Aviation Administration

MAJOR REPAIR AND ALTERATION
(Airframe, Powerplant, Propeller, or Appliance)

Form Approved
OMB No. 2120-0020

For FAA Use Only

Office Identification
GL09

INSTRUCTIONS: Print or type all entries. See FAR 43.9, FAR 43 Appendix B, and AC 43.9-1 (or subsequent revision thereof) for instructions and disposition of this form. This report is required by law (49 U.S.C. 1421). Failure to report can result in a civil penalty not to exceed $1,000 for each such violation (Section 901 Federal Aviation Act of 1958).

1. Aircraft	Make: MOONEY	Model: M20J
	Serial No.: 24-1563	Nationality and Registration Mark: N5813F
2. Owner	Name *(As shown on registration certificate)*: S. KOENIGKNECHT LTD	Address *(As shown on registration certificate)*: 820 WATERS EDGE RD RACINE, WI 53402-1556

3. For FAA Use Only

The data identified herein complies with the applicable airworthiness requirements and is approved for the above described aircraft, subject to conformity inspection by a person authorized in FAR Part 43, Section 43.7.

District Office	Date	Signature of FAA Inspector
GL09	5-30-00	Ralph Payne

4. Unit Identification / **5. Type**

Unit	Make	Model	Serial No.	Repair	Alteration
AIRFRAME	*(As described in Item 1 above)*				X
POWERPLANT					
PROPELLER					
APPLIANCE	Type Manufacturer				

RECEIVED
JUN 07 2000
BY:

6. Conformity Statement

A. Agency's Name and Address	B. Kind of Agency	C. Certificate No.
SUPERIOR AVIATION, INC. 250 RIVERHILLS RD KINGSFORD, MI 49802	[ ] U.S. Certificated Mechanic [ ] Foreign Certificated Mechanic [X] Certificated Repair Station [ ] Manufacturer	EATR437D

D. I certify that the repair and/or alteration made to the unit(s) identified in item 4 above and described on the reverse or attachments hereto have been made in accordance with the requirements of Part 43 of the U.S. Federal Aviation Regulations and that the information furnished herein is true and correct to the best of my knowledge.

Date	Signature of Authorized Individual
MAY 26, 2000	JOHN M SERSICH

7. Approval for Return To Service

Pursuant to the authority given persons specified below, the unit identified in item 4 was inspected in the manner prescribed by the Administrator of the Federal Aviation Administration and is [X] APPROVED [ ] REJECTED

BY							Other *(Specify)*
	[ ]	FAA Flt. Standards Inspector	[ ]	Manufacturer	[ ]	Inspection Authorization	
	[ ]	FAA Designee	[X]	Repair Station	[ ]	Person Approved by Transport Canada Airworthiness Group	

Date of Approval or Rejection	Certificate or Designation No.	Signature of Authorized Individual
MAY 30, 2000	EATR437D	JOHN M SERSICH

FAA Form 337 (12-88)

NOTICE

Weight and balance or operating limitation changes shall be entered in the appropriate aircraft record. An alteration must be compatible with all previous alterations to assure continued conformity with the applicable airworthiness requirements.

8. Description of Work Accomplished

(If more space is required, attach additional sheets. Identify with aircraft nationality and registration mark and date work completed.)

REMOVED EXISTING II MORROW 604TCA LORAN C SYSTEM.

INSTALLED IN ACCORDANCE WITH INSTALLATION MANUAL PN 560-0959-03a, II MORROW MODEL GX50 GPS SYSTEM AND II MORROW ANNUNCIATOR CONTROL UNIT.

THE GX50 GPS RECEIVER WAS INSTALLED IN THE SECONDARY AVIONICS PANEL AT FUSELAGE STATION 15.00 IN THE AREA VACATED BY THE 604TCA LORAN C RECEIVER.

THE II MORROW ACU WAS MOUNTED IN THE PILOT'S FLIGHT PANEL AT FUSELAGE STATION 19.00.

THE II MORROW ACU SELECTS EITHER NUMBER ONE KNS80 OR GX50 STEERING INFORMATION TO THE PILOT'S BENDIX/KING KI525A HSI AND KFC150 AUTOPILOT SYSTEM AND ALSO DISPLAYS THE REQUIRED GX50 DERIVED INFORMATION.

NOTE: THE II MORROW ACU DOES NOT HAVE THE PROVISION FOR AUTO ILS OVER-RIDE AND IT IS THE PILOT'S RESPONSIBILITY TO MANUALLY SELECT NAV ON THE ACU FOR KNS80 ILS APPROACHES.

THE A-33 GPS ANTENNA WAS MOUNTED TOPSIDE AT FUSELAGE STATION 92.00 IN THE AREA VACATED BY THE A16 LORAN ANTENNA WITHOUT DOUBLER MODIFICATION. RTV162 WAS APPLIED TO THE OUTER EDGE TO PREVENT MOISTURE CONTAMINATION.

INSTALLED IN ACCORDANCE WITH INSTALLATION INSTRUCTION DOCUMENTATION DRAWING NUMBER 3230020, ICARUS MODEL 3000U ALTITUDE SERIALIZER WHICH PROVIDES THE REQUIRED ALTITUDE INPUT TO THE GX50 GPS SYSTEM.

TESTED THE ALTITUDE ENCODER AS REQUIRED BY FAR 91.217 (b) IN ACCORDANCE WITH AC43-6A.

STC SA00504SE WAS USED AS THE BASIS OF APPROVAL FOR THE INSTALLATION OF THE GX50 GPS SYSTEM.

THE GX50 AS INSTALLED ABOVE AND IN ACCORDANCE WITH AC20-138 GROUND CHECKED SATISFACTORILY. RECOMPUTED THE ACFT WEIGHT & BALANCE AND REVISED THE EQUIPMENT LIST – MADE THE APPROPRIATE LOG BOOK ENTRY.

NOTE: GPS SYSTEM NOT APPROVED FOR IFR AT THIS TIME WITH PLACARD INSTALLED STATING: "GPS NOT APPROVED FOR IFR"

GX50 AND ACU LOCATIONS SHOWN BELOW:

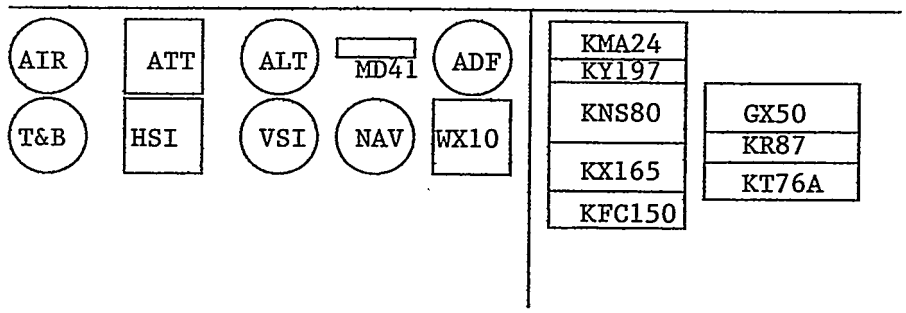

THE END

☐ Additional Sheets Are Attached

*U.S.GPO:1994-568-012/00019

US Department of Transportation
Federal Aviation Administration

MAJOR REPAIR AND ALTERATION
(Airframe, Powerplant, Propeller, or Appliance)

Form Approved
OMB No. 2120-0020

For FAA Use Only

Office Identification
ACE-FSDO-07
~~Wichita, Kansas~~

INSTRUCTIONS: Print or type all entries. See FAR 43.9, FAR 43 Appendix B, and AC 43.9-1 (or subsequent revision thereof) for instructions and disposition of this form. This report is required by law (49 U.S.C. 1421). Failure to report can result in a civil penalty not to exceed $1,000 for each such violation (Section 901 Federal Aviation Act of 1958).

1. Aircraft	Make: Mooney	Model: M20J
	Serial No.: 24-1563	Nationality and Registration Mark: N5813F
2. Owner	Name *(As shown on registration certificate)*: MANNING DAVID J KONENGSKNECHT STEVEN	Address *(As shown on registration certificate)*: 7000 BROOK RD FRANKSVILLE, WI 53126

3. For FAA Use Only

4. Unit Identification / **5. Type**

Unit	Make	Model	Serial No.	Repair	Alteration
AIRFRAME	*(As described in Item 1 above)*				XX
POWERPLANT					
PROPELLER					
APPLIANCE	Type				
	Manufacturer				

RECEIVED NOV 8 1995 Wichita, Kansas

6. Conformity Statement

A. Agency's Name and Address	B. Kind of Agency	C. Certificate No.
CHARLES REMBOLDT JAYHAWK AVIATION 110 RIVERFRONT RD SUITE C LAWRENCE, KS 66044	XX U.S. Certificated Mechanic Foreign Certificated Mechanic Certificated Repair Station Manufacturer	512785496

D. I certify that the repair and/or alteration made to the unit(s) identified in item 4 above and described on the reverse or attachments hereto have been made in accordance with the requirements of Part 43 of the U.S. Federal Aviation Regulations and that the information furnished herein is true and correct to the best of my knowledge.

Date	Signature of Authorized Individual
2 NOV 95	

7. Approval for Return To Service

Pursuant to the authority given persons specified below, the unit identified in item 4 was inspected in the manner prescribed by the Administrator of the Federal Aviation Administration and is XX APPROVED ☐ REJECTED

BY							Other *(Specify)*
		FAA Flt. Standards Inspector		Manufacturer	XX	Inspection Authorization	
		FAA Designee		Repair Station		Person Approved by Transport Canada Airworthiness Group	

Date of Approval or Rejection	Certificate or Designation No.	Signature of Authorized Individual
2 NOV 95	512785496	

FAA Form 337 (12-88)

NOTICE

Weight and balance or operating limitation changes shall be entered in the appropriate aircraft record. An alteration must be compatible with all previous alterations to assure continued conformity with the applicable airworthiness requirements.

8. Description of Work Accomplished

(If more space is required, attach additional sheets. Identify with aircraft nationality and registration mark and date work completed.)

Installed TKS Ice Protection System per manufactures installation manual in conformance with STC SA2367CE May 26, 1988.

Installation complies with acceptable methods, techniques and practices of FAA AC43.13-1A & 2A, Mooney maintenance manual, and TKS Procedures 30-09-46(Handling of Nylon Tubing).

Weight & Balance updated at the time of installation.

END

☐ Additional Sheets Are Attached

FAA AIRCRAFT REGISTRY
CAMERA NO. 2 DATE: 7-15-93

RECEIVED JUN 16 1993

US Department of Transportation
Federal Aviation Administration

MAJOR REPAIR AND ALTERATION
(Airframe, Powerplant, Propeller, or Appliance)

Form Approved
OMB No. 2120-0020

For FAA Use Only
Office Identification GL13

INSTRUCTIONS: Print or type all entries See FAR 43.9, FAR 43 Appendix B, and AC 43.9-1 (or subsequent revision thereof) for instructions and disposition of this form. This report is required by law (49 U.S.C. 1421). Failure to report can result in a civil penalty not to exceed $1,000 for each such violation (Section 901 Federal Aviation Act of 1958).

1. Aircraft	Make: Mooney	Model: M20J
	Serial No.: 24-1563	Nationality and Registration Mark: N5813F
2. Owner	Name (As shown on registration certificate): David J. Manning, Steven Koenigsknecht	Address (As shown on registration certificate): 7000 Brook Road, Franksville, WI 53126

3. For FAA Use Only

4. Unit Identification				5. Type	
Unit	Make	Model	Serial No.	Repair	Alteration
AIRFRAME	(As described in Item 1 above)				X
POWERPLANT					
PROPELLER					
APPLIANCE	Type / Manufacturer				

6. Conformity Statement

A. Agency's Name and Address	B. Kind of Agency	C. Certificate No.
Kenosha Aero Inc. 9420 52nd Street Kenosha WI 53144	U.S. Certificated Mechanic Foreign Certificated Mechanic X Certificated Repair Station Manufacturer	KABR076A

D. I certify that the repair and/or alteration made to the unit(s) identified in item 4 above and described on the reverse or attachments hereto have been made in accordance with the requirements of Part 43 of the U.S. Federal Aviation Regulations and that the information furnished herein is true and correct to the best of my knowledge.

Date	Signature of Authorized Individual
6-11-93	Jack E. Ritter

7. Approval for Return To Service

Pursuant to the authority given persons specified below, the unit identified in item 4 was inspected in the manner prescribed by the Administrator of the Federal Aviation Administration and is ☒ APPROVED ☐ REJECTED

BY						
	FAA Flt. Standards Inspector		Manufacturer		Inspection Authorization	Other (Specify)
	FAA Designee	X	Repair Station		Person Approved by Transport Canada Airworthiness Group	

Date of Approval or Rejection	Certificate or Designation No.	Signature of Authorized Individual
6-11-93	KABR076A	Jack E. Ritter

FAA Form 337 (12-88)

FAA AIRCRAFT REGISTRY
CAMERA NO. 2 DATE: 7-15-93

NOTICE

Weight and balance or operating limitation changes shall be entered in the appropriate aircraft record. An alteration must be compatible with all previous alterations to assure continued conformity with the applicable airworthiness requirements.

8. Description of Work Accomplished
(If more space is required, attach additional sheets. Identify with aircraft nationality and registration mark and date work completed.)

Installed J.P. Instruments temperature monitoring systems in accordance with STC SA2586NM and FAA approved J.P. Instruments Drawing List Report No. 100, Revision C, dated November 11, 1992, or later FAA approved revision. FAA Approved airplane Rotocraft flight manual supplement No. 1 for EGT-701 temperature indicator, Revision original, dated November 12, 1992, or later FAA approved revision. All work is done in accordance with Advisory Circular, AC43:13-1A.

******END******

☐ Additional Sheets Are Attached

☆U.S.G.P.O. 1990-761-753

FAA AIRCRAFT REGISTRY
CAMERA NO. 2 DATE: 6-14-93

US Department of Transportation
Federal Aviation Administration

MAJOR REPAIR AND ALTERATION
(Airframe, Powerplant, Propeller, or Appliance)

RECEIVED MAY

Form Approved
OMB No. 2120-0020
For FAA Use Only
Office Identification GL13

INSTRUCTIONS: Print or type all entries. See FAR 43.9, FAR 43 Appendix B, and AC 43.9-1 (or subsequent revision thereof) for instructions and disposition of this form. This report is required by law (49 U.S.C. 1421). Failure to report can result in a civil penalty not to exceed $1,000 for each such violation (Section 901 Federal Aviation Act of 1958).

1. Aircraft	Make: Mooney	Model: M-20J
	Serial No.: 24-1563	Nationality and Registration Mark: N5813F
2. Owner	Name (As shown on registration certificate): David J. Manning Steven Konengsknecht	Address (As shown on registration certificate): 7000 Brook Rd. Franksville, WI 53126

3. For FAA Use Only

4. Unit Identification				5. Type	
Unit	Make	Model	Serial No.	Repair	Alteration
AIRFRAME	(As described in Item 1 above)				X
POWERPLANT					
PROPELLER					
APPLIANCE	Type				
	Manufacturer				

6. Conformity Statement

A. Agency's Name and Address	B. Kind of Agency	C. Certificate No.
Kenosha Aero Inc. 9420 52nd St. Kenosha, WI 53144	U.S. Certificated Mechanic Foreign Certificated Mechanic X Certificated Repair Station Manufacturer	KABR076A

D. I certify that the repair and/or alteration made to the unit(s) identified in item 4 above and described on the reverse or attachments hereto have been made in accordance with the requirements of Part 43 of the U.S. Federal Aviation Regulations and that the information furnished herein is true and correct to the best of my knowledge.

Date	Signature of Authorized Individual
5-5-93	Jack J. Ritter

7. Approval for Return To Service

Pursuant to the authority given persons specified below, the unit identified in item 4 was inspected in the manner prescribed by the Administrator of the Federal Aviation Administration and is ☒ APPROVED ☐ REJECTED

BY							
		FAA Flt. Standards Inspector		Manufacturer		Inspection Authorization	Other (Specify)
		FAA Designee	X	Repair Station		Person Approved by Transport Canada Airworthiness Group	

Date of Approval or Rejection	Certificate or Designation No.	Signature of Authorized Individual
5-5-93	KABR076A	Jack J. Ritter

FAA Form 337

FAA AIRCRAFT REGISTRY
CAMERA NO. 2 DATE: 6-14-93

NOTICE

Weight and balance or operating limitation changes shall be entered in the appropriate aircraft record. An alteration must be compatible with all previous alterations to assure continued conformity with the applicable airworthiness requirements.

8. Description of Work Accomplished
(If more space is required, attach additional sheets. Identify with aircraft nationality and registration mark and date work completed.)

BRACKETT AIR FILTER INSTALLATION

Replaced existing engine induction air filter with Brackett Aircraft Company Inc. P/N BA-6210 filter assembly. Inaccordance approved model list per STC SA71GL.

----------END----------

☐ Additional Sheets Are Attached

FAA AIRCRAFT REGISTRY
CAMERA NO. 3 DATE: 10-2-91

THOSE DOCUMENTS PRECEDING THIS NOTICE WHICH INDICATE A FILMING DATE OF 9-31-91 IN THE ANNOTATION WINDOW ARE SHOWING AN INCORRECT DATE. THE CORRECT FILMING DATE SHOULD BE 10-01-91.

Madeline Bennett

FAA AIRCRAFT REGISTRY
CAMERA NO. 3 DATE: 9-31-91

UNITED STATES OF AMERICA
RTMENT OF TRANSPORTATION—FEDERAL AVIATION ADMINISTRATION

STANDARD AIRWORTHINESS CERTIFICATE

AND N MARKS	2. MANUFACTURER AND MODEL	3. AIRCRAFT SERIAL NUMBER	4. CATEGORY
313F	Mooney Aircraft Corp. M20J	24-1563	Normal

TY AND BASIS FOR ISSUANCE
worthiness certificate is issued pursuant to the Federal Aviation Act of 1958 and certifies that, as of the issuance, the aircraft to which issued has been inspected and found to conform to the type certificate , to be in condition for safe operation, and has been shown to meet the requirements of the applicable hensive and detailed airworthiness code as provided by Annex 8 to the Convention on International Civil ns, except as noted herein.
ceptions:

NONE

6. TERMS AND CONDITIONS
Unless sooner surrendered, suspended, revoked, or a termination date is otherwise established by the Administrator, this airworthiness certificate is effective as long as the maintenance, preventive maintenance, and alterations are performed in accordance with Parts 21, 43, and 91 of the Federal Aviation Regulations, as appropriate, and the aircraft is registered in the United States.

DATE OF ISSUANCE	FAA REPRESENTATIVE	DESIGNATION NUMBER
11-8-85	Thomas R. Webb	DMIR SW-2041

Any alteration, reproduction, or misuse of this certificate may be punishable by a fine not exceeding $1,000, or imprisonment not exceeding 3 years, or both. THIS CERTIFICATE MUST BE DISPLAYED IN THE AIRCRAFT IN ACCORDANCE WITH APPLICABLE FEDERAL AVIATION REGULATIONS.

FAA Form 8100-2 (7-67) FORMERLY FAA FORM 1362

U.S. Government Printing Office — 1976-675-525

FAA AIRCRAFT REGISTRY
CAMERA NO. 3 DATE: 9-31-91

FAA AIRCRAFT REGISTRY
CAMERA NO. 3 DATE: 9-31-91

UNITED STATES OF AMERICA
DEPARTMENT OF TRANSPORTATION—FEDERAL AVIATION ADMINISTRATION

STANDARD AIRWORTHINESS CERTIFICATE

1 NATIONALITY AND REGISTRATION MARKS	2 MANUFACTURER AND MODEL	3 AIRCRAFT SERIAL NUMBER	4 CATEGORY
N 5813F	MOONEY M20J	24-1563	NORMAL

5 AUTHORITY AND BASIS FOR ISSUANCE

This airworthiness certificate is issued pursuant to the Federal Aviation Act of 1958 and certifies that, as of the date of issuance, the aircraft to which issued has been inspected and found to conform to the type certificate therefor, to be in condition for safe operation, and has been shown to meet the requirements of the applicable comprehensive and detailed airworthiness code as provided by Annex 8 to the Convention on International Civil Aviation, except as noted herein.

Exceptions

NONE

6 TERMS AND CONDITIONS

Unless sooner surrendered, suspended, revoked, or a termination date is otherwise established by the Administrator, this airworthiness certificate is effective as long as the maintenance, preventative maintenance, and alterations are performed in accordance with Parts 21, 43, and 91 of the Federal Aviation Regulations, as appropriate, and the aircraft is registered in the United States.

DATE OF ISSUANCE	FAA REPRESENTATIVE	DESIGNATION NUMBER
Replacement 11-08-85	Stephen P. Gibbs	ASO-FSDO-05

Any alteration, reproduction, or misuse of this certificate may be punishable by a fine not exceeding $1,000, or imprisonment not exceeding 3 years, or both. THIS CERTIFICATE MUST BE DISPLAYED IN THE AIRCRAFT IN ACCORDANCE WITH APPLICABLE FEDERAL AVIATION REGULATIONS.

FAA Form 8100-2 (8-82)

* U.S. GPO: 1989—662-877

FAA AIRCRAFT REGISTRY
CAMERA NO. 3 DATE: 9-31-91

FAA AIRCRAFT REGISTRY
CAMERA NO. 1 N DATE: 12 - 10 -90

US Department of Transportation
Federal Aviation Administration

MAJOR REPAIR AND ALTERATION
(Airframe, Powerplant, Propeller, or Appliance)

Form Approved
OMB No. 2120-0020
For FAA Use Only
Office Identification
KC-FSDO-63

INSTRUCTIONS: Print or type all entries. See FAR 43.9, FAR 43 Appendix B, and AC 43.9-1 (or subsequent revision thereof) for instructions and disposition of this form. This report is required by law (49 U.S.C. 1421). Failure to report can result in a civil penalty not to exceed $1,000 for each such violation (Section 901 Federal Aviation Act of 1958).

1. Aircraft	Make: Mooney	Model: M-20J
	Serial No.: 24-1563	Nationality and Registration Mark: USA N-5813F
2. Owner	Name (As shown on registration certificate): Scott Charters	Address (As shown on registration certificate): Hgr. 33, Box 36, Rolla MO 64501

3. For FAA Use Only

4. Unit Identification / **5. Type**

Unit	Make	Model	Serial No.	Repair	Alteration
AIRFRAME	(As described in Item 1 above)				X
POWERPLANT					
PROPELLER					
APPLIANCE	Type				
	Manufacturer				

6. Conformity Statement

A. Agency's Name and Address	B. Kind of Agency	C. Certificate No.
Kings Avionics Inc. 151st & Pflumm, Ste 30 Olathe KS 66062	U.S. Certificated Mechanic Foreign Certificated Mechanic X Certificated Repair Station Manufacturer	TF2R185L

D. I certify that the repair and/or alteration made to the unit(s) identified in item 4 above and described on the reverse or attachments hereto have been made in accordance with the requirements of Part 43 of the U.S. Federal Aviation Regulations and that the information furnished herein is true and correct to the best of my knowledge.

Date	Signature of Authorized Individual
4-6-90	Gary L Morris 2347550

7. Approval for Return To Service

Pursuant to the authority given persons specified below, the unit identified in item 4 was inspected in the manner prescribed by the Administrator of the Federal Aviation Administration and is X APPROVED ☐ REJECTED

BY							
		FAA Flt. Standards Inspector		Manufacturer		Inspection Authorization	Other (Specify)
		FAA Designee	X	Repair Station		Person Approved by Transport Canada Airworthiness Group	

Date of Approval or Rejection	Certificate or Designation No.	Signature of Authorized Individual
4-6-90	TF2R185L	Gary L Morris 2347550

FAA Form 337 (12-88)

FAA AIRCRAFT REGISTRY
CAMERA NO. 1 N DATE: 12 - 10 - 90

NOTICE

Weight and balance or operating limitation changes shall be entered in the appropriate aircraft record. An alteration must be compatible with all previous alterations to assure continued conformity with the applicable airworthiness requirements.

8. Description of Work Accomplished
(If more space is required, attach additional sheets. Identify with aircraft nationality and registration mark and date work completed.)

Installed Apollo 604TCA Loran per manufacturers prints and drawings contained in manual # 560-003, dated March 1985.

Installation meets or exceeds FAA AC-20-121A, and AC-43.13-1A, paragraphs 22, 23, 37 & 38.

Equipment List and Weight and Balance updated.

See Weight and Balance this date for loading.

Unit placarded Loran-C not approved for IFR.

☐ Additional Sheets Are Attached

FAA AIRCRAFT REGISTRY
CAMERA NO. DATE: 11-5-89

DEPARTMENT OF TRANSPORTATION
FEDERAL AVIATION ADMINISTRATION

MAJOR REPAIR AND ALTERATION
(Airframe, Powerplant, Propeller, or Appliance)

Form Approved
Budget Bureau No. 04-R060.1

FOR FAA USE ONLY
OFFICE IDENTIFICATION
EAFSDO-11

INSTRUCTIONS: Print or type all entries. See FAR 43.9, FAR 43 Appendix B, and AC 43.9-1 (or subsequent revision thereof) for instructions and disposition of this form.

1. AIRCRAFT	MAKE: MOONEY	MODEL: M-20J
	SERIAL NO.: 24-1563	NATIONALITY AND REGISTRATION MARK: N5813F
2. OWNER	NAME (As shown on registration certificate): ALPER, ANDREW M. SADOW, SHARON	ADDRESS (As shown on registration certificate): 235 ADAMS ST. Brooklyn, N.Y. 11201

3. FOR FAA USE ONLY

4. UNIT IDENTIFICATION

UNIT	MAKE	MODEL	SERIAL NO.	5. TYPE REPAIR	5. TYPE ALTERATION
AIRFRAME	(As described in item 1 above)			✓	
POWERPLANT					
PROPELLER					
APPLIANCE	TYPE / MANUFACTURER				

6. CONFORMITY STATEMENT

A. AGENCY'S NAME AND ADDRESS	B. KIND OF AGENCY	C. CERTIFICATE NO.
WILLIAM ZINK 21 BRIDGE ST. CORNWALL N.Y. 12518	X U.S. CERTIFICATED MECHANIC FOREIGN CERTIFICATED MECHANIC CERTIFICATED REPAIR STATION MANUFACTURER	152486076

D. I certify that the repair and/or alteration made to the unit(s) identified in item 4 above and described on the reverse or attachments hereto have been made in accordance with the requirements of Part 43 of the U.S. Federal Aviation Regulations and that the information furnished herein is true and correct to the best of my knowledge.

DATE	SIGNATURE OF AUTHORIZED INDIVIDUAL
2-6-89	William R Zink

7. APPROVAL FOR RETURN TO SERVICE

Pursuant to the authority given persons specified below, the unit identified in item 4 was inspected in the manner prescribed by the Administrator of the Federal Aviation Administration and is ☒ APPROVED ☐ REJECTED

BY						
	FAA FLT. STANDARDS INSPECTOR	MANUFACTURER	X	INSPECTION AUTHORIZATION	OTHER (Specify)	
	FAA DESIGNEE	REPAIR STATION		CANADIAN DEPARTMENT OF TRANSPORT INSPECTOR OF AIRCRAFT		

DATE OF APPROVAL OR REJECTION	CERTIFICATE OR DESIGNATION NO.	SIGNATURE OF AUTHORIZED INDIVIDUAL
2-6-89	12.04227	John W Houde

FAA Form 337 (7-67)

(8320)

FAA AIRCRAFT REGISTRY
CAMERA NO. DATE: 11-15-89

NOTICE

Weight and balance or operating limitation changes shall be entered in the appropriate aircraft record. An alteration must be compatible with all previous alterations to assure continued conformity with the applicable airworthiness requirements.

8. DESCRIPTION OF WORK ACCOMPLISHED (*If more space is required, attach additional sheets. Identify with aircraft nationality and registration mark and date work completed.*)

L/H WING TIP SKIN REPLACEMENT

REMOVED DAMAGED SKIN L/H WING TIP FROM RIB STA. 193.50 TO RIB STA. 210.97. FITTED & INSTALLED UPPER AND LOWER SKIN P/N 220000-213, SECTION PROVIDED BY THE MANUFACTURER. AN 426 AD 4, CR-3242-4 AND CR3243-4 CHERRY MAX RIVETS WERE USED TO DUPLICATE THE INSTALLATION OF THE ORIGONAL SKIN. ALL WORK WAS PERFORMED IN ACCORDANCE WITH AC 43.13-1A & 2B, SECTION 3 PAR. 96, 99, AND 100. AIRCRAFT WAS TEST RUN AND CHECKED OK.

END

-00-03 - AIRCRAFT STATIONS

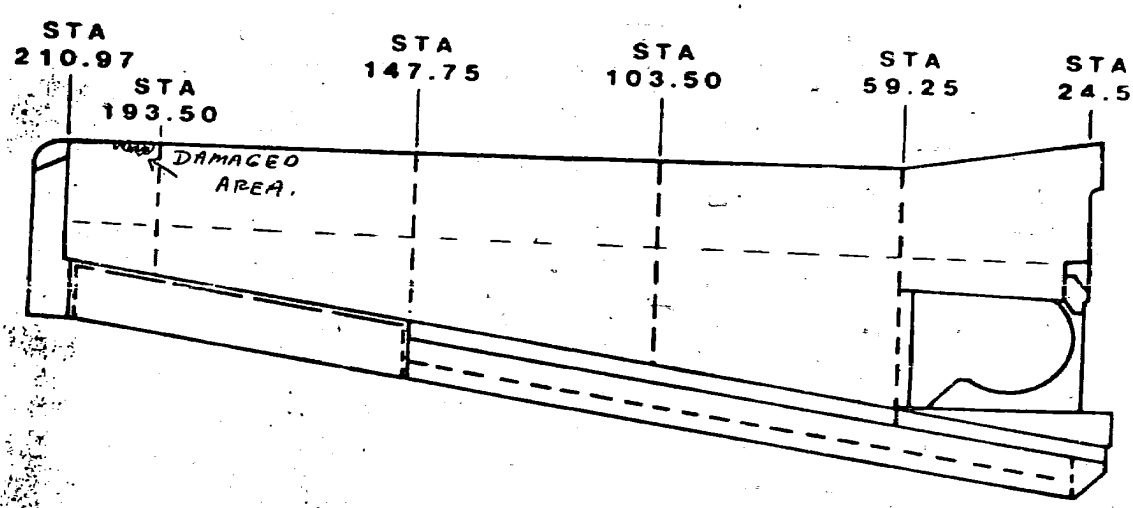

L/H WING STATION RIBS
FIGURE 6-2

☐ ADDITIONAL SHEETS ARE ATTACHED

☆U.S. GOVERNMENT PRINTING OFFICE: 1977—771-021/344

FAA AIRCRAFT REGISTRY
CAMERA NO. DATE: 11-15-89

Form Approved
O.M.B. No. 2120-0018

U.S. Department of Transportation
Federal Aviation Administration

APPLICATION FOR AIRWORTHINESS CERTIFICATE

INSTRUCTIONS — Print or type. Do not write in shaded areas, these are for FAA use only. Submit original only to an authorized FAA Representative. If additional space is required, use an attachment. For special flight permits complete Sections II and VI or VII as applicable.

I. AIRCRAFT DESCRIPTION

1. REGISTRATION MARK: N5813F	2. AIRCRAFT BUILDER'S NAME (Make): Mooney Aircraft Corp.	3. AIRCRAFT MODEL DESIGNATION: M20J	FAA CODING: 5870219
4. AIRCRAFT SERIAL NO: 24-1563	5. ENGINE BUILDER'S NAME (Make): Lycoming	6. ENGINE MODEL DESIGNATION: IO-360-A3B6D	4151
7. NUMBER OF ENGINES: ONE	8. PROPELLER BUILDER'S NAME (Make): McCauley	9. PROPELLER MODEL DESIGNATION: B2D34C214/90DHB-16E	10. AIRCRAFT IS (Check if applicable): IMPORT

II. CERTIFICATION REQUESTED

APPLICATION IS HEREBY MADE FOR: (Check applicable items)

- A 1 [X] STANDARD AIRWORTHINESS CERTIFICATE (Indicate category) [X] NORMAL [ ] UTILITY [ ] ACROBATIC [ ] TRANSPORT [ ] GLIDER [ ] BALLOON
- B [ ] SPECIAL AIRWORTHINESS CERTIFICATE (Check appropriate items)
  - 2 [ ] LIMITED
  - 5 [ ] PROVISIONAL (Indicate class): 1 CLASS I; 2 CLASS II
  - 3 [ ] RESTRICTED (Indicate operation(s) to be conducted): 1 AGRICULTURE AND PEST CONTROL; 2 AERIAL SURVEYING; 3 AERIAL ADVERTISING; 4 FOREST (Wildlife conservation); 5 PATROLLING; 6 WEATHER CONTROL; 7 CARRIAGE OF CARGO; 8 OTHER (Specify)
  - 4 [ ] EXPERIMENTAL (Indicate operation(s) to be conducted): 1 RESEARCH AND DEVELOPMENT; 2 AMATEUR BUILT; 3 EXHIBITION; 4 RACING; 5 CREW TRAINING; 6 MKT SURVEY; 0 TO SHOW COMPLIANCE WITH FAR
  - 8 [ ] SPECIAL FLIGHT PERMIT (Indicate operation to be conducted, then complete Section VI or VII as applicable on reverse side): 1 FERRY FLIGHT FOR REPAIRS, ALTERATIONS, MAINTENANCE OR STORAGE; 2 EVACUATE FROM AREA OF IMPENDING DANGER; 3 OPERATION IN EXCESS OF MAXIMUM CERTIFICATED TAKE-OFF WEIGHT; 4 DELIVERING OR EXPORT; 5 PRODUCTION FLIGHT TESTING; 6 CUSTOMER DEMONSTRATION FLIGHTS
- C 8 [ ] MULTIPLE AIRWORTHINESS CERTIFICATE (Check ABOVE "Restricted Operation" and "Standard" or "Limited," as applicable.)

IF DEALER, CHECK HERE → [X]

III. OWNER & CERTIFICATION

A. REGISTERED OWNER (As shown on certificate of aircraft registration)

NAME: MOONEY AIRCRAFT CORPORATION
ADDRESS: P.O. Box 72, Kerrville, TX 78029

B. AIRCRAFT CERTIFICATION BASIS (Check applicable blocks and complete items as indicated)

- [X] AIRCRAFT SPECIFICATION OR TYPE CERTIFICATE DATA SHEET (Give No. and Revision No.): 2A3 Revision 32
- [X] AIRWORTHINESS DIRECTIVES (Check if all applicable AD's complied with and give latest AD No.): 85-20
- [ ] AIRCRAFT LISTING (Give page number(s))
- [ ] SUPPLEMENTAL TYPE CERTIFICATE (List number of each STC incorporated)

C. AIRCRAFT OPERATION AND MAINTENANCE RECORDS

- [X] CHECK IF RECORDS IN COMPLIANCE WITH FAR 91.173
- TOTAL AIRFRAME HOURS: 3.1
- 3 [ ] EXPERIMENTAL ONLY (Enter hours flown since last certificate issued or renewed)

D. CERTIFICATION — I hereby certify that I am the registered owner (or his agent) of the aircraft described above; that the aircraft is registered with the Federal Aviation Administration in accordance with Section 501 of the Federal Aviation Act of 1958, and applicable Federal Aviation Regulations, and that the aircraft has been inspected and is airworthy and eligible for the airworthiness certificate requested.

DATE OF APPLICATION	NAME AND TITLE (Print or type)	SIGNATURE
11-8-85	Eual M. Conditt, Jr. Director, Product Quality & Support	Eual M. Conditt Jr.

IV. INSPECTION AGENCY VERIFICATION

A. THE AIRCRAFT DESCRIBED ABOVE HAS BEEN INSPECTED AND FOUND AIRWORTHY BY (Complete this section only if FAR 21.183(d) applies)

- 2 [ ] FAR PART 121 OR 127 CERTIFICATE HOLDER (Give Certificate No.)
- 3 [ ] CERTIFICATED MECHANIC (Give Certificate No.)
- 6 [ ] CERTIFICATED REPAIR STATION (Give Certificate No.)
- 5 [ ] AIRCRAFT MANUFACTURER (Give name of firm)

DATE | TITLE | SIGNATURE

V. FAA REPRESENTATIVE CERTIFICATION

(Check ALL applicable blocks in items A and B)

A. I find that the aircraft described in Section I or VII meets requirements for:
- [X] THE CERTIFICATE REQUESTED
- 4 [ ] AMENDMENT OR MODIFICATION OF CURRENT AIRWORTHINESS CERTIFICATE

B. Inspection for a special flight permit under Section VII was conducted by:
- [ ] FAA INSPECTOR
- [ ] CERTIFICATE HOLDER UNDER: [ ] FAA DESIGNEE [ ] FAR 65 [ ] FAR 121, 127 or 135 [ ] AR 145

DATE	DISTRICT OFFICE	DESIGNEE'S SIGNATURE AND NO.	FAA INSPECTOR'S SIGNATURE
11-8-85	SW MIDO 43	Thomas D. Webb DMIR SW-2041	

FAA Form 8130-6 (12-83) SUPERSEDES PREVIOUS EDITION

FAA AIRCRAFT REGISTRY
CAMERA NO. DATE: 11-15-89

VI. PRODUCTION FLIGHT TESTING

A. MANUFACTURER

NAME	ADDRESS

B. PRODUCTION BASIS *(Check applicable item)*

- [ ] PRODUCTION CERTIFICATE *(Give production certificate number)*
- [ ] TYPE CERTIFICATE ONLY
- [ ] APPROVED PRODUCTION INSPECTION SYSTEM

C. GIVE QUANTITY OF CERTIFICATES REQUIRED FOR OPERATING NEEDS →

DATE OF APPLICATION	NAME AND TITLE *(Print or type)*	SIGNATURE

VII. SPECIAL FLIGHT PERMIT PURPOSES OTHER THAN PRODUCTION FLIGHT TEST

A. DESCRIPTION OF AIRCRAFT

REGISTERED OWNER	ADDRESS
BUILDER *(Make)*	MODEL
SERIAL NUMBER	REGISTRATION MARK

B. DESCRIPTION OF FLIGHT — CUSTOMER DEMONSTRATION FLIGHTS ☐ *(Check if applicable)*

FROM	TO	
VIA	DEPARTURE DATE	DURATION

C. CREW REQUIRED TO OPERATE THE AIRCRAFT AND ITS EQUIPMENT

- [ ] PILOT
- [ ] CO-PILOT
- [ ] NAVIGATOR
- [ ] OTHER *(Specify)*

D. THE AIRCRAFT DOES NOT MEET THE APPLICABLE AIRWORTHINESS REQUIREMENTS AS FOLLOWS

E. THE FOLLOWING RESTRICTIONS ARE CONSIDERED NECESSARY FOR SAFE OPERATION *(Use attachment if necessary)*

F. **CERTIFICATION** — I hereby certify that I am the registered owner (or his agent) of the aircraft described above; that the aircraft is registered with the Federal Aviation Administration in accordance with Section 501 of the Federal Aviation Act of 1958, and applicable Federal Aviation Regulations; and that the aircraft has been inspected and is airworthy for the flight described.

DATE	NAME AND TITLE *(Print or type)*	SIGNATURE

VIII. AIRWORTHINESS DOCUMENTATION (FAA use only)

X	A. Operating Limitations and Markings in Compliance with FAR 91.31 as Applicable	X	G. Statement of Conformity, FAA Form 8130-9 *(Attach when required)*
	B. Current Operating Limitations Attached		H. Foreign Airworthiness Certification for Import Aircraft *(Attach when required)*
	C. Data, Drawings, Photographs, etc. *(Attach when required)*		I. Previous Airworthiness Certificate Issued in Accordance with FAR ____ CAR ____ *(Original Attached)*
X	D. Current Weight and Balance Information Available in Aircraft		
	E. Major Repair and Alteration, FAA Form 337 *(Attach when required)*		J. Current Airworthiness Certificate Issued in Accordance with
X	F. This Inspection Recorded in Aircraft Records	X	FAR 21.183 (b) *(Copy attached)*

FAA AIRCRAFT REGISTRY
CAMERA NO. DATE: 11-15-89

UNITED STATES OF AMERICA
DEPARTMENT OF TRANSPORTATION—FEDERAL AVIATION ADMINISTRATION

STANDARD AIRWORTHINESS CERTIFICATE

1. NATIONALITY AND REGISTRATION MARKS	2. MANUFACTURER AND MODEL	3. AIRCRAFT SERIAL NUMBER	4. CATEGORY
N5813F	Mooney Aircraft Corp.	24-1563	Normal

5. AUTHORITY AND BASIS FOR ISSUANCE
This airworthiness certificate is issued pursuant to the Federal Aviation Act of 1958 and certifies that, as of the date of issuance, the aircraft to which issued has been inspected and found to conform to the type certificate therefor, to be in condition for safe operation, and has been shown to meet the requirements of the applicable comprehensive and detailed airworthiness code as provided by Annex 8 to the Convention on International Civil Aviation, except as noted herein.
Exceptions:

★ NONE ★

6. TERMS AND CONDITIONS
Unless sooner surrendered, suspended, revoked, or a termination date is otherwise established by the Administrator, this airworthiness certificate is effective as long as the maintenance, preventive maintenance, and alterations are performed in accordance with Parts 21, 43, and 91 of the Federal Aviation Regulations, as appropriate, and the aircraft is registered in the United States.

DATE OF ISSUANCE	FAA REPRESENTATIVE	DESIGNATION NUMBER
11-8-85	Thomas D. Webb	DMIR SW-2041

Any alteration, reproduction, or misuse of this certificate may be punishable by a fine not exceeding $1,000, or imprisonment not exceeding 3 years, or both. THIS CERTIFICATE MUST BE DISPLAYED IN THE AIRCRAFT IN ACCORDANCE WITH APPLICABLE FEDERAL AVIATION REGULATIONS.

FAA Form 8100-2 (7-67) FORMERLY FAA FORM 1362

☆ U.S. Government Printing Office — 1974-475-538

FAA AIRCRAFT REGISTRY
CAMERA NO. DATE: 11-15-89

FAA AIRCRAFT REGISTRY
CAMERA NO. DATE: 11-15-89

Not Subject to OMB Clearance

UNITED STATES OF AMERICA
DEPARTMENT OF TRANSPORTATION
FEDERAL AVIATION ADMINISTRATION

STATEMENT OF CONFORMITY

SECTION I – AIRCRAFT

1. MAKE MOONEY AIRCRAFT CORPORATION	2. MODEL M20J
3. SERIAL NO. 24-1563	4. REGISTRATION NO. N5813F

SECTION II – ENGINE

1. MAKE	2. MODEL
3. SERIAL NO.	

SECTION III – PROPELLER

1. MAKE	2. HUB MODEL
3. BLADE MODEL	4. HUB SERIAL NO.
5. BLADE SERIAL NOS.	

SECTION IV – CERTIFICATION

I hereby certify that:

[ ] A. I have complied with Section 21.33(a).

[X] B. The aircraft described above, produced under type certificate only (FAR 21 Subpart F), conforms to its type certificate, is in a condition for safe operation, and was flight checked on 11-1-85 (Date).

[ ] C. The engine or propeller described above, presented herewith for type certification, conforms to the type design therefor.

[ ] D. The engine or propeller described above produced under type certificate only (FAR 21 Subpart F), conforms to its type certificate and is in a condition for safe operation. The engine or, if applicable, the variable pitch propeller was subjected by the manufacturer to a final operational check on _____ (Date).

Deviations:

NONE

SIGNATURE OF CERTIFIER Eual M. Condit Jr.	TITLE Director, Product Quality & Support
ORGANIZATION MOONEY AIRCRAFT CORPORATION	DATE 11-8-85

FAA Form 8130-9 (9-78) USE PREVIOUS EDITION

FAA AIRCRAFT REGISTRY
CAMERA NO. DATE: 11-15-81

INSTRUCTIONS

This form should be submitted to a representative of the Administrator under the following circumstances:

1. By the applicant for a type certificate or a supplemental type certificate at the time he presents an aircraft or parts thereof to the FAA for tests.

2. By the applicant for a type certificate or a supplemental type certificate for each engine or propeller submitted for type certification.

3. By the type certificate holder or licensee manufacturing products under a type certificate only, upon the initial transfer by him of the ownership of each product or upon application for the original issue of an aircraft airworthiness certificate, or an Airworthiness Approval Tag (FAA Form 8130—3).

This form should be completed as follows:

Section I. Aircraft. Complete the pertinent part of only this section when certification covers an aircraft or part thereof.

Section II. Engine. Complete this section when certification covers an engine.

Section III. Propeller. Complete this section when certification covers a propeller.

Section IV. Certification.

Item A. Check this block when an aircraft or part thereof is presented for flight or ground tests during type certification or supplemental type certification.

Item B. Check this block when the holder or licensee of a type certificate only, initially transfers the ownership of an aircraft manufactured under that type certificate, or applies for the original issuance of an airworthiness certificate.

Item C. Check this block when an engine or propeller is presented for type certification.

Item D. Check this block when an engine or propeller is presented for airworthiness approval and insert the date the product completed a final operational check.

The certification must be signed by an authorized person who holds a responsible position in the manufacturing organization.

☆ U.S. GOVERNMENT PRINTING OFFICE: 1982-572-771/455